Workshop Manual
Caddy 1996>, Polo Classic 1996>

Booklet	**Electrical system Caddy 1996>Polo Classic 1999>, Polo Estate 1999>**

Edition 10.99

Protected by copyright. Copying for private or commercial purposes, in part or in whole, is not permitted unless authorised by Volkswagen AG. Volkswagen AG does not guarantee or accept any liability with respect to the correctness of information in this document. Copyright by Volkswagen AG.

satelettronica

Service.

List of Workshop Manual Repair Groups

Caddy 1996>, Polo Classic 1996>

Booklet	**Electrical system Caddy 1996>Polo Classic 1999>, Polo Estate 1999>** **Edition 10.99**

Repair Group	Technical Bulletins					
01 Self-diagnosis						
27 Starter, Current supply						
90 Gauges, Instruments						
92 Windscreen wipe and wash system						
94 Lights, Lamps, Switches - exterior						
96 Lights, Lamps, Switches - interior						
97 Wiring						

Protected by copyright. Copying for private or commercial purposes, in part or in whole, is not permitted unless authorised by Volkswagen AG. Volkswagen AG does not guarantee or accept any liability with respect to the correctness of information in this document. Copyright by Volkswagen AG.

satelettronica

Technical Information should always be available to all foremen and mechanics, because their com- pliance with the instructions given is essential to ensure vehicle roadworthiness and safety. In the normal safety precautions to be observed when working on motor vehicles are also applicable.

All rights reserved.
No reproduction without prior agreement from publisher.
Copyright © 1999 Volkswagen AG, Wolfsburg

Printed in Germany
000.5640.62.20

Contents

01 Self-diagnosis — **Page**

Self-diagnosis **01-1**
- Tools 01-1
- Connecting fault reader 01-2

Self-diagnosis of immobilizer **01-3**
- Additional information and prerequisites for work requiring the 7-digit PIN 01-4
- Performing self-diagnosis of immobilizer 01-6
- Reading measured value block 01-18
- Adapting ignition keys 01-23
- Lost key procedure 01-30
- Setting when changing immobilizer control unit (coding control unit) 01-31
- Procedure after changing immobilizer control unit 01-33
- Procedure after changing engine control unit (Adaption) 01-38
- Procedure when immobilizer control unit and engine control unit have been changed 01-43
- Procedure for immobilizer malfunctions 01-43
- Activating used engine control unit 01-46

27 Starter, Current supply — **Page**

Battery **27-1**
- Battery contents list 27-1
- Fundamentals for batteries 27-2
- Battery handling instructions 27-4
- Batteries with condition indicator 27-6
- Visual check 27-7
- Checking electrolyte level (batteries with condition indicator) 27-8
- Batteries without condition indicator 27-11
- Checking electrolyte level 27-12
- Checking specific gravity 27-17
- Battery discharge (load) test 27-21
- Battery charging 27-22
- Removing and installing battery 27-26
- Explanation of central gas venting 27-33

Starter **27-34**
- Removing and installing starter (1.4 ltr. petrol engine) 27-35
- Removing and installing starter (1.6 ltr., 1.8 ltr. petrol engine and diesel engine) 27-38

Removing and installing alternator with ribbed belt **27-40**
- 4-cylinder fuel injection engine, 1.4 ltr. basic belt drive vehicles >04.99 27-41
- 4-cylinder fuel injection engine 1.4 ltr. with basic belt drive vehicles 05.99 > 27-44
- 4-cylinder fuel injection engine 1.4 ltr. with power-assisted steering vehicles >04.99 27-47
- 4-cylinder fuel injection engine 1.4 ltr. with power-assisted steering, vehicles 05.99 > 27-50
- 4-cylinder fuel injection engine 1.4 ltr. with air conditioner compressor and power-assisted steering >04.99 . 27-53
- 4-cylinder fuel injection engine 1.4 ltr. with power-assisted steering and air conditioner compressor vehicles 05.99 > 27-56
- 4-cylinder fuel injection engine 1.6 ltr. and 1.8 ltr. vehicles > 04.99 27-60
- 4-cylinder fuel injection engine 1.6 ltr. and 1.8 ltr. vehicles 05.99 > 27-62
- Diesel engine vehicles >04.99 27-64
- Diesel engine vehicles 05.99 > 27-66
- Ribbed belt drive 27-68
- Checking V-belt 27-70
- Checking ribbed belt 27-71
- Removing and installing ribbed belt 27-72
- Compact alternator with ribbed belt drive, vehicles >04.99 27-78
- Checking alternator carbon brushes, vehicles >04.99 27-79
- Removing and installing voltage regulator for alternator, vehicles > 04.99 27-80
- Compact alternator with ribbed belt drive, vehicles 05.99 > 27-81
- Checking alternator carbon brushes, vehicles 05.99 > 27-82
- Removing and installing voltage regulator for alternator, vehicles 05.99 > 27-83
- Replacing alternator ribbed belt pulley 27-84
- Removing and installing ribbed belt pulley with freewheel 27-86

90 Gauges, Instruments — **Page**

Removing and installing dash panel insert **90-1**
- Renewing bulbs in dash panel insert (VDO) 90-3

Protected by copyright. Copyright © Volkswagen AG: Volkswagen AG does not guarantee or accept any liability with respect to the correctness of information in this document. Copyright by Volkswagen AG. Distribution to third parties, translations and reproduction are not permitted unless authorised by Volkswagen AG.

satelettronica

- Renewing bulbs in dash panel insert (MOTOMETER) 90-6
- Dash panel insert (VDO) warning lamp symbols 90-8
- Connector contact assignment on dash panel insert 90-10
Service interval display 90-11
- Zeroing service interval display 90-12
- Flexible service interval display 90-13
- Zeroing flexible service interval display 90-15
- Entering service interval data 90-16

92 Windscreen wipe and wash system **Page**
Windscreen wiper system 92-1
- Windscreen wiper system assembly overview 92-2
- Removing and installing windscreen wiper system 92-4
- Removing and installing wiper blade rubber 92-11
Windscreen washer and headlight washer system 92-12
- Windscreen washer and headlight washer system assembly overview 92-12
- Adjusting windscreen washer system jets 92-14
- Adjusting headlight washer system jets 92-15
- Removing windscreen washer system jets 92-16
- Removing headlight washer system jets 92-17
- Removing windscreen washer and headlight washer system reservoir 92-18
Rear window wipe/wash system 92-19
- Rear window wiper system assembly overview (Caddy) 92-20
- Rear window wiper system assembly overview (Polo Estate) 92-22
- Adjusting rear window wiper rest position 92-24
- Adjusting washer jets 92-25
- Removing rear window wiper (Caddy) 92-26
- Removing rear window wiper (Polo Estate) 92-28

94 Lights, Lamps, Switches - exterior **Page**
Headlight 94-1
- Assembly overview: Headlight 94-1
- Adjusting headlights 94-3
- Removing and installing headlights 94-4
- Replacing headlight bulb 94-5
- Removing and installing headlight range control positioning motor 94-7
Front fog lights 94-8
- Removing and installing fog lights 94-8
- Removing and installing foglight bulb 94-9
Front turn signals 94-10
- Removing and installing front turn signals 94-11
- Replacing turn signal bulb 94-12
Side mounted turn signals 94-13
- Removing and installing side mounted turn signals 94-13
Tail lights 94-14
- Rear lights Caddy assembly overview 94-14
- Removing and installing rear lights Polo Classic 94-16
- Removing and installing rear lights Polo Estate 94-18
- Removing and installing tail light bulb holder Caddy 94-20
- Removing and installing tail light bulb holder Polo Estate 94-21
- Removing and installing tail light bulb holder Polo Classic 94-22
Additional brake light 94-23
- Removing and installing additional brake light Polo Classic 94-23
- Removing and installing additional brake light Polo Estate 94-24
Number plate lights 94-26
- Removing and installing number plate light Polo Classic 94-26
- Removing and installing number plate light Caddy 94-27
- Removing and installing number plate light Polo Estate 94-28
Steering column switch and starter/ignition switch 94-29
- Steering column assembly overview 94-29
- Removing and installing steering column switch 94-34
- Wiring connections on steering column switches 94-36
- Removing and installing steering lock housing 94-38
- Removing and installing lock cylinder 94-43
- Removing and installing ignition/starter switch 94-44

Protected by copyright. Copyright by Volkswagen AG. Information contained in this document is not permitted unless authorised by Volkswagen AG. Volkswagen AG does not guarantee or accept any liability with respect to the correctness of information in this document. Copyright by Volkswagen AG.
satelettronica

- Connector pin assignment on steering column switch 94-46

96 Lights, Lamps, Switches - interior **Page**
Immobilizer 96-1
- Immobilizer assembly overview 96-2
- Removing and installing immobilizer control unit 96-3
- Removing and installing immobilizer reading coil -D2- 96-3
- Transponder 96-4
Interior lights and switches 96-5
- Removing and installing switches in dash panel 96-5
- Removing and installing light switch 96-7
- Removing and installing switches in centre dash panel 96-8
- Removing and installing interior light 96-9
- Removing and installing glove box light -W6- 96-11
- Removing and installing door contact switch 96-12
- Removing and installing luggage compartment light switch 96-13
- Removing and installing luggage compartment light -W3- 96-14

97 Wiring **Page**
Removing and installing relay plate, coupling station and fuse holder 97-1
- Removing and installing relay plate 97-2
- Removing and installing multi-pin connector behind relay plate 97-3
Wiring harness and connector repairs 97-5

Protected by copyright. Copying for private or commercial purposes, in part or in whole, is not permitted unless authorised by Volkswagen AG. Volkswagen AG does not guarantee or accept any liability with respect to the correctness of information in this document. Copyright by Volkswagen AG.

satelettronica

Self-diagnosis

Tools

Special tools, workshop equipment, testers, measuring instruments and auxiliary items required

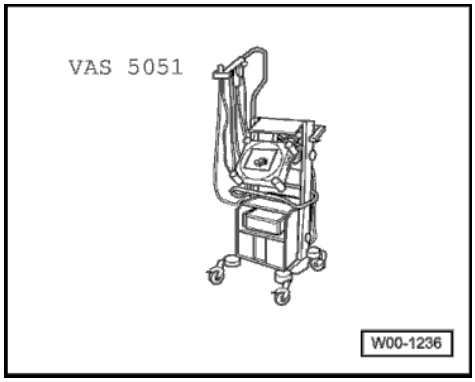

- VAS 5051 Vehicle Diagnosis, Testing and Information System
- Diagnosis cable VAS 5051/1 or VAS 5051/3

Connecting fault reader

Connecting Vehicle Diagnosis, Testing and Information System VAS 5051

- Pull on handbrake.
- Automatic gearbox: Selector lever to position "P" or "N".
- Manual gearbox: Gear stick in neutral.

With ignition switched off connect VAS 5051 as follows:

- Open and unhook compartment on driver's side.
- With ignition switched off connect VAS 5051 using adapter cable VAS 5051/3.
- Switch on ignition.
- Switch off all electrical consumers.

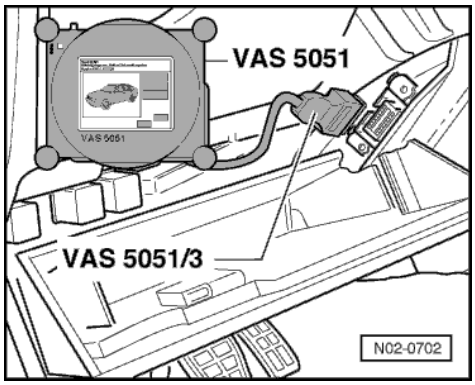

Protected by copyright. Copying for private or commercial purposes, in part or in whole, is not permitted unless authorised by Volkswagen AG. Volkswagen AG does not guarantee or accept any liability with respect to the correctness of information in this document. Copyright by Volkswagen AG.
satelettronica

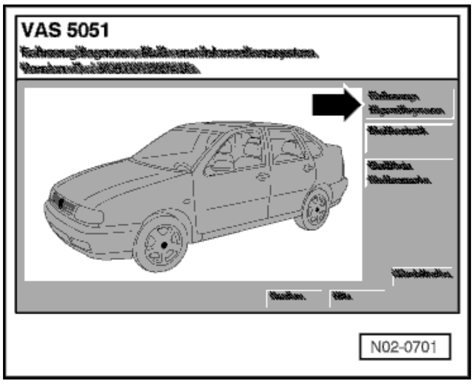

◄ Indicated on display:

- Press button for "Vehicle self-diagnosis" on display -arrow-.

All diagnostic functions available are indicated on the display.

- Press button on display for desired function.

Note:

If the display is not as per the display in the work sequence:

=> Operating instructions for Vehicle Diagnosis, Testing and Information System VAS 5051.

Self-diagnosis of immobilizer

Up to 11.97, the first generation immobilizer is installed.

From 12.97, the second generation immobilizer has been introduced.

Notes:

- ♦ Self-diagnosis of the immobilizer can only be performed using the Vehicle Testing, Measuring and Information System VAS 5051.
- ♦ Observe additional information and prerequisites when working with 7-digit PIN=>page 01-4.

Communication of the immobilizer control unit and engine control unit is performed via the W line.

The electronic immobilizer consists of:

- ♦ an immobilizer control unit
- ♦ an adapted engine control unit
- ♦ a reader coil on the ignition lock
- ♦ adapted ignition keys with electronic components (transponder and response reader memory)

Additional information and prerequisites for work requiring the 7-digit PIN

Self-diagnosis of the immobilizer can, with immediate effect, only be performed using the Vehicle Testing, Measuring and Information System VAS 5051.

Immobilizer secret number is encoded for reasons of security. The encoded secret number has 7 characters (PIN= Personal Identification Number).

The PIN is only valid for the requested day, thereafter a new PIN is required.

The change affects all vehicles with an immobilizer, even older vehicles.

The request system per Online and Fax is worldwide. The German market will change immediately to the PIN system.

As of year 2001 the changes will affect importers and the interrogation of the 4 digit will no longer be possible.

The workshop code is required to request the PIN.

Protected by copyright. Copying for private or commercial purposes, in part or in whole, is not permitted unless authorised by Volkswagen AG. Volkswagen AG does not guarantee or accept any liability with respect to the correctness of information in this document. Copyright by Volkswagen AG.

sateletronica

The PIN can only be used with Vehicle Testing, Measuring and Information System VAS 5051 as of base CD version V02.10.

This version includes the workshop code (WSC = dealership number) and the 3 digit number of the importer or distribution centre.

The PIN is worthless for other dealerships.

Warning!

Check Vehicle Testing, Measuring and Information System VAS 5051 for correct operating data (Importers and dealership numbers) and date/time.

Adaption of the immobilizer cannot be performed with false data.

Performing self-diagnosis of immobilizer

- Connecting Vehicle Diagnosis, Testing and Information system VAS 5051 => Page 01-2.
- Switch on ignition.

Note:

If the display is not as per the display in the work sequence:

=> Operating instructions for Vehicle Diagnosis, Testing and Information System VAS 5051.

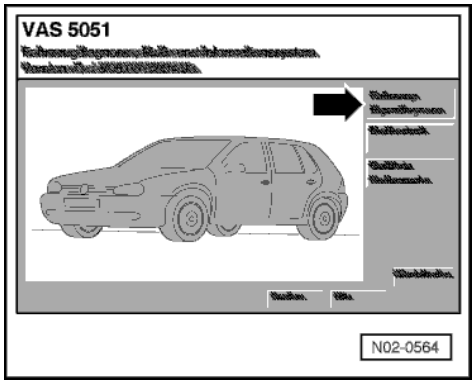

Indicated on display:

- Press button for "Vehicle self-diagnosis" on display -arrow-.

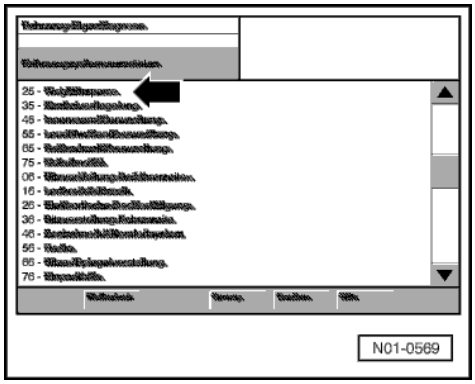

Indicated on display:

- Press "25 - Immobilizer" on display -arrow-.

Protected by copyright. Copying for private or commercial purposes, in part or in whole, is not permitted unless authorised by Volkswagen AG. Volkswagen AG does not guarantee or accept any liability with respect to the correctness of information in this document. Copyright by Volkswagen AG.

satelettronica

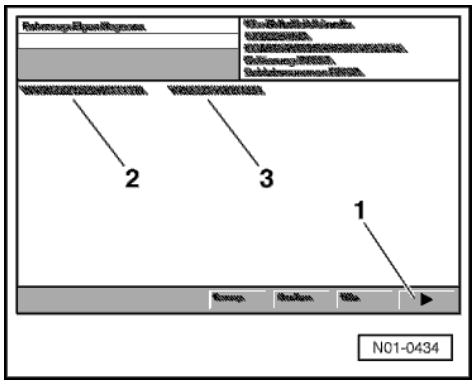

◀ Indicated on display:

The control unit identification and coding are displayed -arrow-:

- Selected address word
- Part number of control unit
- System designation (IMMO), version number
- Code number[1)]
- Dealership number[2)]

[1)] - Dependent on engine, gearbox and additional equipment

[2)] - Will be automatically stored in the control unit when entering the system.

The 17-digit chassis number (WVW....) -2- and the 14-digit identification number (VW....) -3- are shown on the display.

- Press arrow button -1- on display.

satelettronica

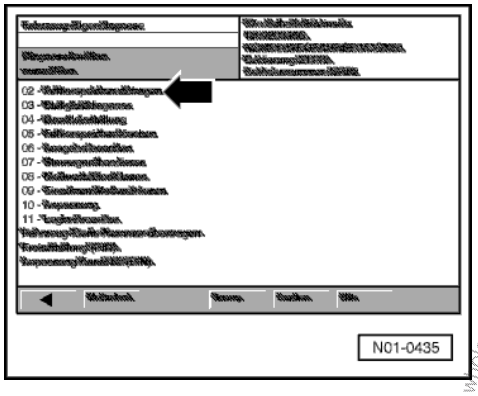

List of selectable functions

◀ Indicated on display:

		Page
02 -	Interrogate fault memory	01-9
05 -	Erase fault memory	01-9
06 -	End output	01-12
07 -	Code control unit	01-31
08 -	Read measured value block	01-18
10 -	Adaption	01-23
Transfer vehicle identification number		01-43
Activating (PIN)		01-31
Adapting channel 50 (PIN)		01-31

Valid for vehicles from model year 2001

Note:

Entering the vehicle identification number using number block is only permitted when changing several components. This must be done before performing adaption functions. If this sequence is not followed, the engine cannot be started.

Continuation for all vehicles

Protected by copyright. Copying for private or commercial purposes, in part or in whole, is not permitted unless authorised by Volkswagen AG. Volkswagen AG does not guarantee or accept any liability with respect to the correctness of information in this document. Copyright by Volkswagen AG.

Interrogating fault memory

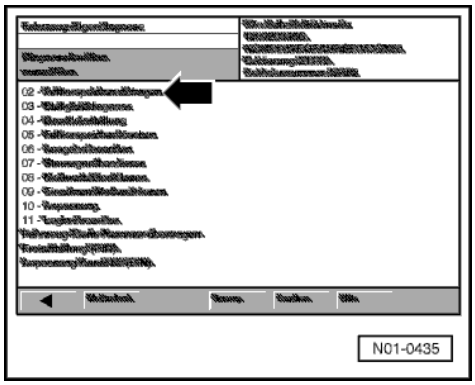

◀ Indicated on display:

- Press "02 - Interrogate fault memory" on display - arrow-.

Note:

The displayed fault information is not constantly updated, but only when initiating the self-diagnosis or with the function 05 "Erase fault memory".

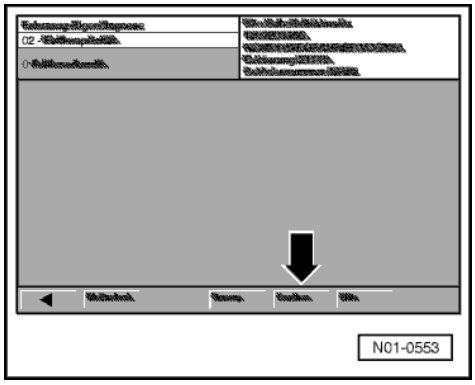

◀ The stored faults are shown on the display:

- Press "Print" button on display and then press "Screen" in the print menu.

The VAS 5051 prints out the faults indicated on display or "No faults detected". If faults are stored then repair measures are required. Pass fault print-out on for repair.

- End output => page 01-12.

Erasing fault memory

Note:

After erasing the fault memory its contents will automatically be indicated. If the fault memory cannot be erased, again interrogate fault memory and repair faults.

Prerequisites

- ♦ Fault memory has been interrogated =>page 01-9.
- ♦ All faults repaired.

After fault memory has been successfully interrogated:

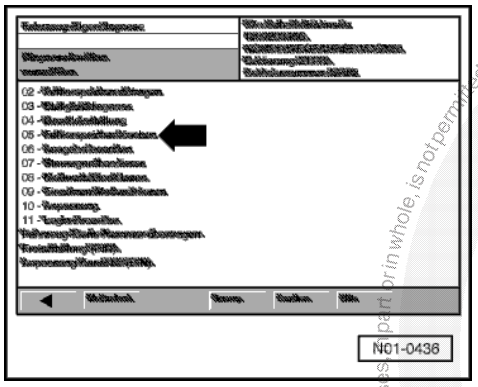

◀ Indicated on display:

- Press "05 - Erase fault memory" on display -arrow-.

satelettronica
Protected by copyright. Copying for private or commercial purposes, in part or in whole, is not permitted unless authorised by Volkswagen AG. Volkswagen AG does not guarantee or accept any liability with respect to the correctness of information in this document. Copyright by Volkswagen AG.

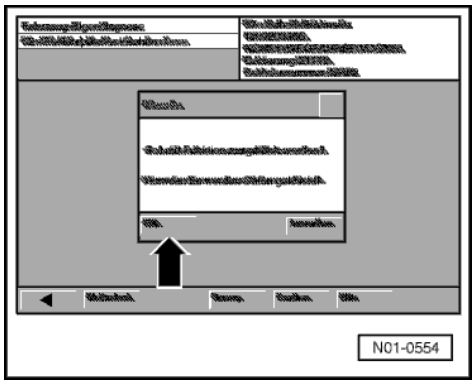

◀ Indicated on display:

- Confirm note -arrow-.

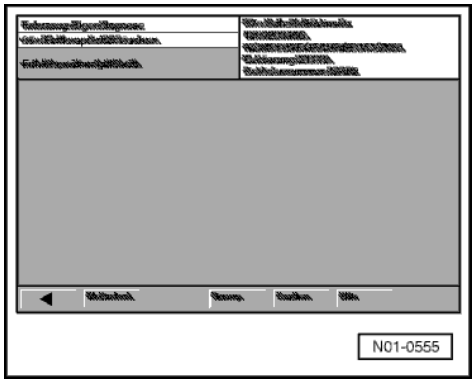

◀ Indicated on display:

The fault memory is now erased.

- End output => page 01-12.

Ending output

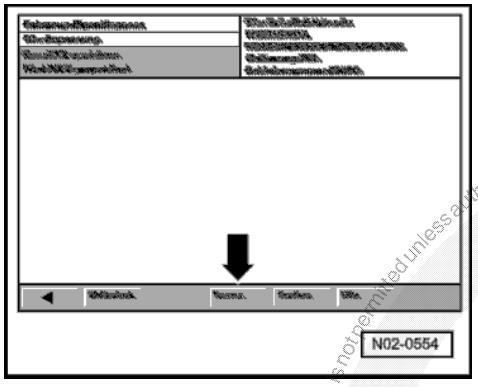

◀ Indicated on display:

- Press "Go to" button on display -arrow-.

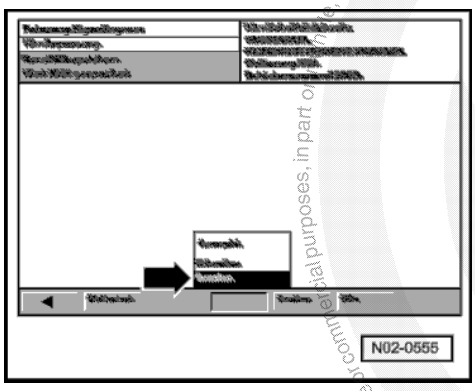

◀ Indicated on display:

- Press "exit" button -arrow- on display.
- Press "exit" button in exit menu.
- Switch off ignition and separate diagnostic connections.

satelettronica
Protected by copyright. Copying for private or commercial purposes, in part or in whole is not permitted unless authorised by Volkswagen AG. Volkswagen AG does not guarantee or accept any liability with respect to the correctness of information in this document. Copyright by Volkswagen AG.

Fault table

Warning!

After repairs the fault memory of engine control unit must always be interrogated and fault memory content "Engine control unit blocked"erased, check and if necessary eliminate further faults stored.

Notes:

- All statistical and sporadic faults are stored in the fault memory: A fault is recognized as a statistical fault when it is present for at least 2 seconds. If the fault is no longer present after this time, it is stored as a sporadic fault.
- After switching on the ignition, faults stored are first recognized as sporadic and are changed to statistical if they are present after the check has been completed.
- If a sporadic fault is no longer present during the next 50 driving cycles (ignition on for a minimum of 2 seconds) it is erased.
- In the following table all possible faults are listed additionally with 5 digit code numbers, that can be recognized by the immobilizer control unit -J362- and are displayed in the Vehicle Testing, Measuring and Information System VAS 5051.
- Before replacing a component shown as faulty, check wiring and connections to the component as well as earth connections according to current flow diagram.
- Check that the connectors on the relay plate are correctly located and locked-in.
- When repair has been carried out, the fault memory must be interrogated again using Vehicle Testing, Measuring and Information System VAS 5051 and erased, and interrogated again.

VAS 5051 print-out	Possible fault cause	Fault elimination
No fault recognized!	If "No fault recognized" appears after completing repairs, self-diagnosis is ended.	

VAS 5051 print-out	Possible fault cause	Fault elimination
00546 Data cable defective		
Implausible signal	- No signal or implausible signal on the "W" wire between immobilizer control unit and engine control unit or fuel cut-off valve control unit.	- Check wire for open circuit or short circuit.
	- The immobilizer control unit Baud rate (data transfer speed) is incorrect.	- Code control unit and enter correct Baud rate => page 01-31.
	- Faulty operation: After the engine has stopped the ignition is switched on again immediately (engine is still in the run-on phase).	- Switch off ignition, wait at least 10 seconds, switch on ignition and then again select function 02 "Interrogate fault memory", => page 01-9.
	Immobilizer control unit -J362- defective.	- Erase fault memory and then again interrogate => page 01-9, if necessary renew immobilizer control unit -J362-.

Protected by copyright. Copying for private or commercial purposes, in part or in whole, is not permitted unless authorised by Volkswagen AG. Volkswagen AG does not guarantee or accept any liability with respect to the correctness of information in this document. Copyright by Volkswagen AG.

satelettronica

VAS 5051 print-out	Possible fault cause	Fault elimination
01128 Immobilizer reader coil -D2	3 pin connector not connected at control unit or reader coil with wiring defective Immobilizer control unit -J362- defective	- Check connector, reader coil and wiring (visual check), if necessary replace reader coil. - Erase fault memory and interrogate again => page 01-9, if necessary renew immobilizer control unit -J362-.
01176 Key Signal too low	Reader coil or wire defective (transfer resistance/loose contact). Electronics in ignition key (transponder) missing or does not work. Type of transponder in ignition key incorrect.	- Check reader coil with wiring and connector (visual check), if necessary replace reader coil. - Renew ignition key, readapt all keys and check function => Page 01-23.
Not authorized	Correct profile ignition key not adapted.	- Readapt ignition key and check function => Page 01-23.

VAS 5051 print-out	Possible fault cause	Fault elimination
01177 Engine control unit Not authorized	Engine control unit or fuel cut-off valve control unit not matched. W wire between the control units is OK.	- Match engine control unit or fuel cut-off valve control unit, =>Page 01-38.
01179		

Key programming incorrect	Adaption of ignition keys is faulty. Electronics in ignition key (transponder) missing or does not work. Type of transponder in ignition key incorrect.	- Readapt all ignition keys by inputting secret number and check function =>page 01-23. - Renew ignition key, readapt all keys and check function => page 01-23.
01181 Initial matching: only 2 keys learnt	The ignition has been switched on with an ignition key for a third time longer than 1 second during the initial matching. Only two ignition keys can be matched during the initial matching.	- Erase fault memory and again interrogate =>page 01-9.
01202 Diagnosis wire Short circuit	Short circuit between wires of connector, 10-pin, chambers 7 and 8 (W and K) on immobilizer control unit -J362-. Immobilizer control unit -J362- defective.	- Check connector and, if necessary, rectify fault using current flow diagram - Erase fault memory and interrogate again => page 01-9, if necessary, renew immobilizer control unit -J362-
01237 Fuel cut-off valve -N109		

Protected by copyright. Copyright by Volkswagen AG.
Volkswagen AG does not accept any liability with respect to the correctness of information in this document. Copyright by Volkswagen AG.
Copyright by Volkswagen AG. Volkswagen AG does not accept any liability with respect to the correctness of information in this document. Copyright by Volkswagen AG.
Protected by copyright. Copyright for private or commercial purposes, in part or in whole, is not permitted unless authorised by Volkswagen AG.
satelettronica

defective	Fuel cut-off valve control unit or fuel cut-off valve defective.	- Remove fuel cut-off valve control unit and separate electrical connection Briefly connect battery voltage terminal 30 to fuel cut-off valve (use adapter set V.A.G 1594 A): - Fuel cut-off valve clicks audibly - => Replace fuel cut-off valve control unit - Fuel cut-off valve does not click - => Replace fuel cut-off valve

VAS 5051 print-out	Possible fault cause	Fault elimination
65535 Control unit		
Defective	Short between wires in 8 pin or 10 pin connector, chambers 7 and 8 ("W" and "K")	- Eliminate fault using current flow diagram
	The immobilizer control unit -J362- does not recognise the correct Baud rate (data transfer speed).	- Renew immobilizer control unit -J362-
	The immobilizer control unit -J362- cannot build-up communication via the data bus.	- Renew immobilizer control unit -J362-
	Immobilizer control unit -J362- defective.	- Renew immobilizer control unit -J362-.

Reading measured value block

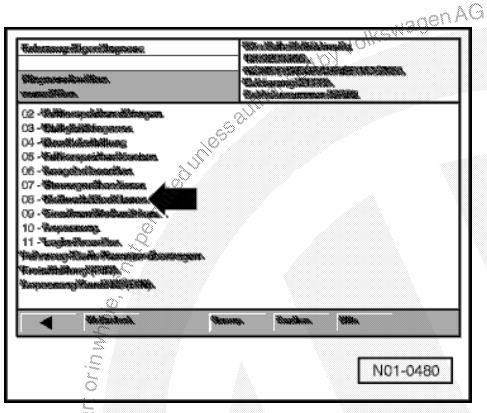

◀ Indicated on display:

- Press "08 - Read measured value block" on display -arrow-.

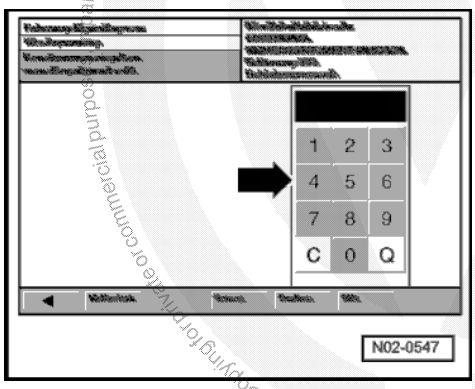

◀ Indicated on display:

- Press number of reading measured value block on display number block -arrow- and confirm entry with "Q" key.

Overview of display group numbers to be selected for vehicles ▸11.97

Display group	Display zone in display
001	1 = Reader coil 2 = Key condition 3 = Authorised key

Notes:

satelettronica

- The measured value block always displays the condition of immobilizer, which was present after switching on the ignition.
- A change of this condition after switching on the ignition, caused by electrical faults, is only displayed after switching on the ignition again and calling up the function "Read measured value block".

Example of measured value block contents:

Display group number 001:

- Press "0, 0 and 1" on display number block and confirm entry with "Q" key.

If "0" is displayed in display zone 1, the reader coil is faulty.

If "1" is displayed in display zone 1, the reader coil is OK.

satelettronica

Protected by copyright. Copying for private or commercial purposes, in part or in whole, is not permitted unless authorised by Volkswagen AG. Volkswagen AG does not guarantee or accept any liability with respect to the correctness of information in this document. Copyright by Volkswagen AG.

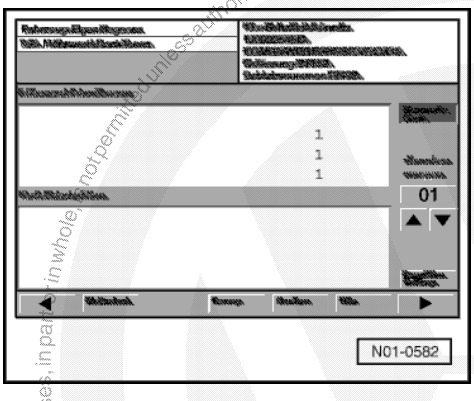

Display group number 001:

Indicated on display:

Display example	Display zone	Display possibility
1	2 = Reader coil	0 = faulty 1 = OK
1	2 = Key condition	0 = defective 1 = fault-free
1	3 = Authorised key	0 = no 1 = yes

Overview of display group numbers to be selected for vehicles 12.97 ▸

Display group	Display zone in display
001	1 = No. of keys learnt 2 = Reader coil 3 = Key condition 4 = Authorised key
002	1 = Learning time for keys in seconds 2 = Specified number of keys 3 = Actual number of keys 4 = Key matching status

Notes:

- The measured value block always displays the condition of immobilizer, which was present after switching on the ignition.

♦ A change of this condition after switching on the ignition, caused by electrical faults, is only displayed after switching on the ignition again and calling up the function "Read measured value block".

Example of measured value block contents:

Display group number 001:

- Press "0, 0 and 1" on display number block and confirm entry with "Q" key.

If "3" is displayed in display zone 1, 3 keys are learnt.

If "4" is displayed in display zone 1, 4 keys are learnt.

Display group number 001:

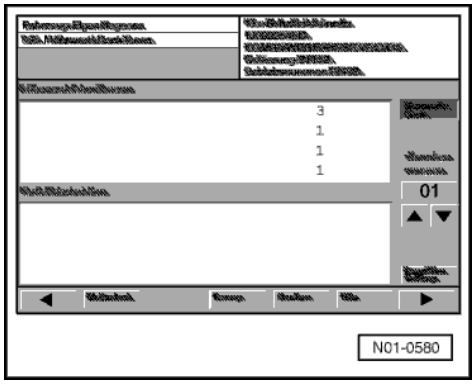

◀ Indicated on display:

Display example	Display zone	Display possibility
3	1 = No. of keys learnt	0 = minimum 8 = maximum
1	2 = Reader coil	0 = faulty 1 = OK
1	3 = Key condition	0 = defective 1 = fault-free
1	4 = Authorised key	0 = no 1 = yes

Display group number 002:

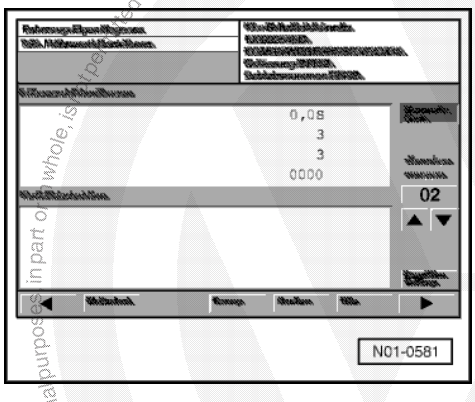

◀ Indicated on display:

Display example	Display zone	Display possibility
0.0 s	1 = Learning time for keys	Learning time in seconds
3	2 = Specified number of keys	0 = minimum 8 = maximum
3	3 = Actual number of keys	0 = minimum 8 = maximum
0000	4 = Key matching status - Fault status - Matching - Actual key - Actual matching	0XXX = no fault 1XXX = fault X0XX = ended X1XX = running XX0X = OK XX1X = not OK XXX0 = OK XXX1 = not OK

satelettronica

Protected by copyright. Copying for private or commercial purposes, in part or whole, is not permitted unless authorised by Volkswagen AG. Volkswagen AG does not guarantee or accept any liability with respect to the correctness of information in this copy. Copyright by Volkswagen AG.

Adapting ignition keys

Notes:

- If new or additional ignition keys are required they must be adapted to the immobilizer control unit.
- Note procedure when changing the locking set and the immobilizer control unit.
- The adaption procedure must always be carried out for all the ignition keys.
- The number of keys already adapted will be displayed when the adaption function is selected.
- If only one key is adapted, the vehicle can be started immediately with this key. If more than one key has been adapted, the vehicle can only be started immediately with the last key adapted.

Warning!

The VAS 5051 dealership number (workshop code) will be stored in immobilizer control unit when adapting ignition keys.

Prerequisites

- All ignition keys available. If old ignition key is not available see "Lost key procedure", => page 01-30
- PIN is available, if not see "Establishing PIN", => page 01-30

Note:

If the display is not as per the display in the work sequence:

=> Operating instructions for Vehicle Diagnosis, Testing and Information System VAS 5051.

- Insert correct profile ignition key in the ignition lock.
- Connect Vehicle Diagnosis, Measuring and Information System VAS 5051, select operating mode "Vehicle self-diagnosis", switch on ignition and select "25 - Immobilizer".

◀ Indicated on display:

- Obtain PIN according to chassis number -2- and identification number -3- stored in the immobilizer control unit.
- Press arrow button -1- on display.

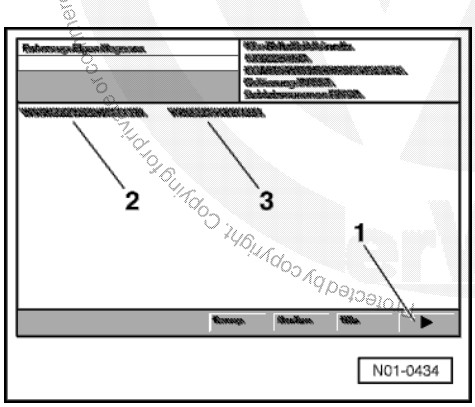

Protected by copyright. Copying for private or commercial purposes, in part or in whole, is not permitted unless authorised by Volkswagen AG. Volkswagen AG does not guarantee or accept any liability with respect to the correctness of information in this document. Copyright by Volkswagen AG.

satelettronica

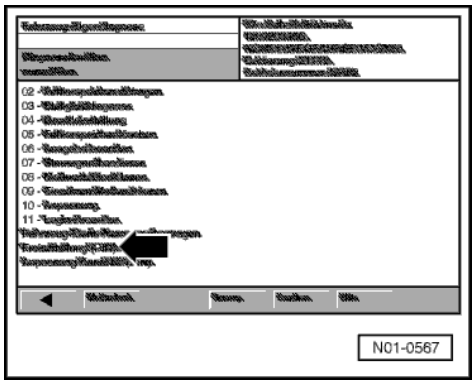

◀ Indicated on display:

- Press "Activating (PIN)" on display -arrow-.

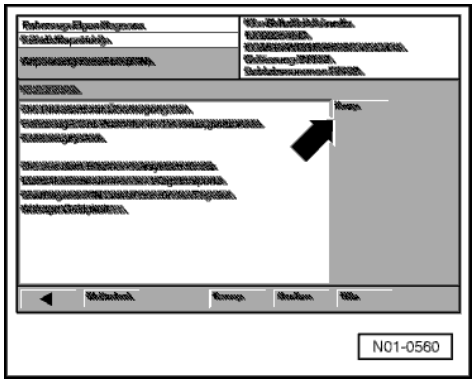

◀ Indicated on display:

- Confirm note -arrow-.

Protected by copyright. Copyright by Volkswagen AG. Volkswagen AG does not guarantee or accept any liability with respect to the correctness of information in this document. Copying for private or commercial purposes, in part or in whole, is not permitted unless authorised by Volkswagen AG.

satelettronica

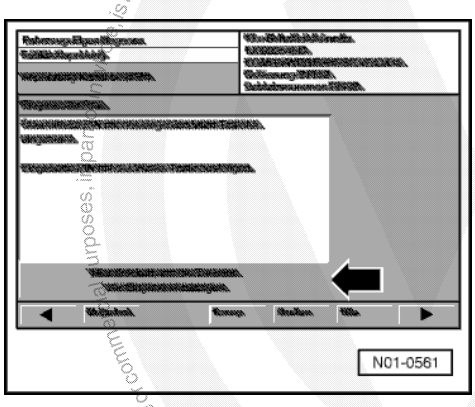

◀ Indicated on display:

- Confirm note -arrow-.

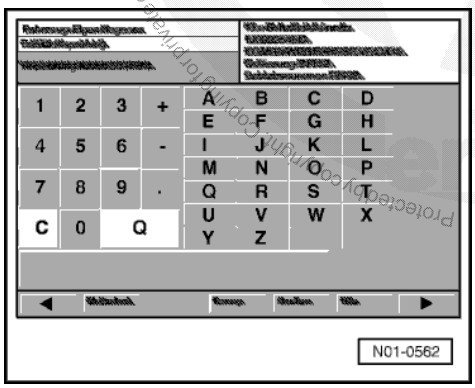

◀ Indicated on display:

- Enter 7-digit PIN using number block.
- Press ⇒ key.

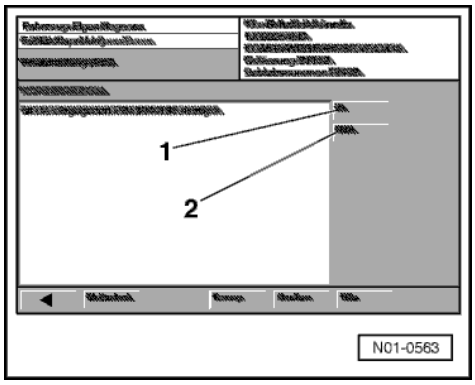

◀ Indicated on display:

- Check entered PIN.
- If PIN is correct, confirm with "Yes" -1-.
- If PIN is not correct, press button "No" -2- and enter PIN again using number block.

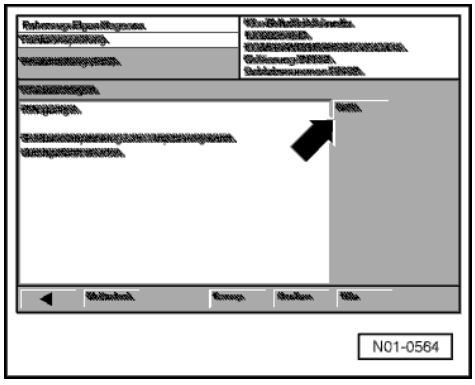

◀ Indicated on display:

- Confirm note -arrow-.

If "Function not known or cannot be carried out at the moment" is displayed, repeat entry.

Notes:

♦ 3 attempts to enter the correct PIN are possible immediately, the next 3 attempts are only permitted after a minimum of 10 minutes if the ignition remains switched on during this time and the self-diagnosis is exited via the function 06 "End output".

♦ The waiting period between each 3 attempts doubles each time up to a maximum of 255 minutes.

Protected by copyright. Copying for private or commercial purposes, in part or in whole, is not permitted unless authorised by Volkswagen AG. Volkswagen AG does not guarantee or accept any liability with respect to the correctness of information in this document.

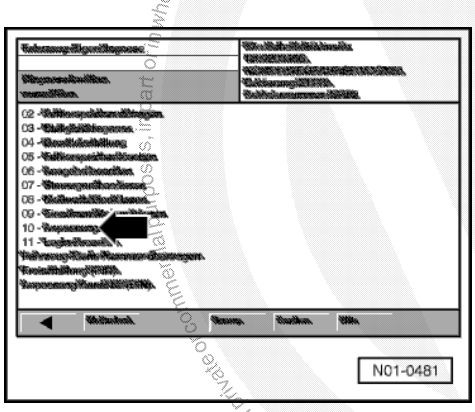

If the PIN again is not valid, note additional information and prerequisites for work requiring the 7-digit PIN => page 01-4.

◀ Indicated on display:

- Press "10 - Adaption" on display -arrow-.

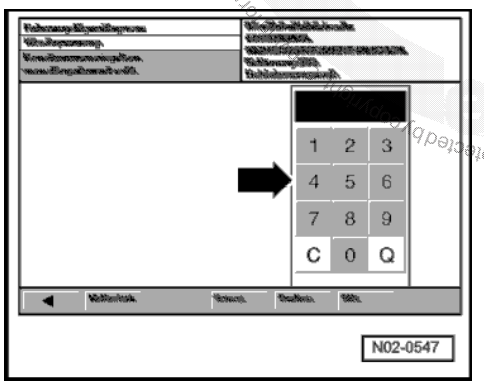

◀ Indicated on display:

- Press keys 0 and 1 on the display number block -arrow-.
- Confirm entry with Q key on display number block.

satelettronica

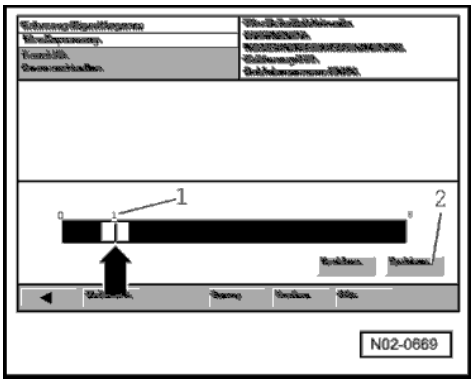

◀ Indicated on display:

- Drag the position indicator -arrow- in the display until the number of keys appears above the scroll bar -1-.

Note:

For same number of keys the value must be modified and reset.

◀ - Press "Save" button -2- on display.

The key in ignition/starter lock is now adapted.

- Switch off ignition.
- Insert the next key in the ignition lock and switch on ignition for at least 1 second.
- Repeat this procedure until all keys are adapted.

Notes:

- ♦ The matching of the ignition keys will be automatically terminated after 60 seconds; the time will not be registered with the ignition switched off.
- ♦ All ignition keys matched before the termination remain valid.
- ♦ Matching all ignition keys again after a termination is only possible after 2 minutes with ignition switched off and by calling - up the function "Matching ignition keys" again.
- ♦ The matching procedure must always be carried out for all the ignition keys, this means also those ignition keys which were matched before the termination must be matched again.

The adaption of ignition keys is automatically terminated when:

- ♦ number of keys to be adapted is reached.
- ♦ an already adapted key is used to switch on the ignition again and the ignition remains switched on for longer than 1 second (fault is stored)
- ♦ permitted adaption period of 60 seconds is exceeded (fault is stored) after switching ignition on using the 2nd key.

- Select function "Interrogate fault memory". If there is no fault stored, the adaption of keys has been successfully completed.
- End output => page 01-12.

Lost key procedure

- Order replacement ignition key.

Establishing PIN

If the 7-digit PIN is not known or invalid it must be established corresponding to the data of immobilizer control unit or engine control unit.

- Adapt all ignition keys => page 01-23.
- Adapt engine control unit => page 01-38

Protected by copyright. Copying for private or commercial purposes, in part or in whole, is not permitted unless authorised by Volkswagen AG. Volkswagen AG does not guarantee or accept any liability with respect to the correctness of information in this document. Copyright by Volkswagen AG.
satelettronica

Setting when changing immobilizer control unit (coding control unit)

Valid for vehicles ▸ 11.97

Note:

If the display is not as per the display in the work sequence:

=> Operating instructions for Vehicle Diagnosis, Testing and Information System VAS 5051.

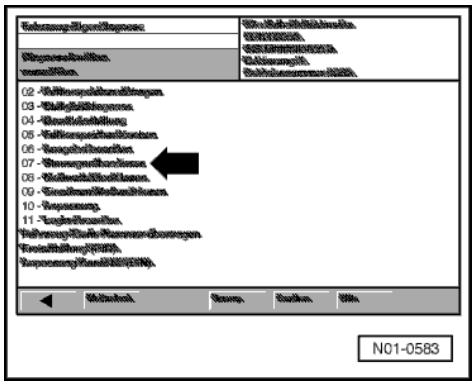

◀ Indicated on display:

- Press "07 - Coding control unit" on display -arrow-.

satelettronica

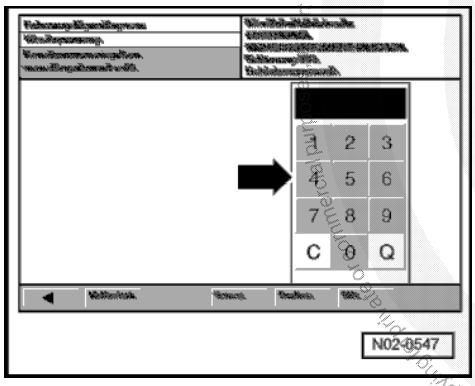

◀ Indicated on display:

The following coding variants are possible for the Polo:

- 09600 - Petrol engine, TDI and SDI engine
- 02400 - Diesel engine, except TDI and SDI engine

- Press corresponding keys on the display number block -arrow-.
- Confirm entry with Q key on display number block.

Valid for vehicles 12.97 ▸

The control unit for the 2nd generation of immobilizers are equipped with an automatic recognition for the Baud rate, this means that it is not necessary to code the control unit.

The correct data transfer speed between engine control unit and immobilizer control unit will be automatically stored in the immobilizer control unit.

Notes:

- ♦ If the immobilizer control unit cannot recognize the correct Baud rate, the coding will be set to "00000".
- ♦ The fault "Control unit defective" will be recorded in the fault memory => page 01-13.

Copyright by Volkswagen AG. Volkswagen AG does not guarantee or accept any liability with respect to the correctness of information in this document. Copyright by Volkswagen AG. Reproduction, also in part, or in whole, is not permitted unless authorised by Volkswagen AG.

Procedure after changing immobilizer control unit

- Code immobilizer control unit => page 01-31.

Note:

If the display is not as per the display in the work sequence:

=> Operating instructions for Vehicle Diagnosis, Testing and Information System VAS 5051.

- Connect Vehicle Diagnosis, Measuring and Information System VAS 5051, select operating mode "Vehicle self-diagnosis", switch on ignition and select "25 - Immobilizer".

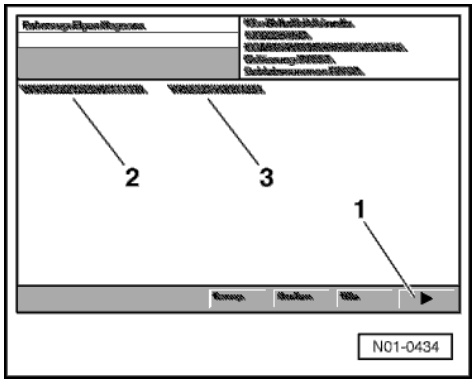

◀ Indicated on display:

- Obtain PIN according to chassis number -2- stored in the immobilizer control unit and identification number -3-.
- Press arrow button -1- on display.
- Adapt all ignition keys => page 01-23.
- Connect Vehicle Diagnosis, Measuring and Information System VAS 5051, select operating mode 1 "Vehicle self-diagnosis", switch on ignition and select "25 - Immobilizer".

Protected by copyright. Copying for private or commercial purposes, in part or in whole, is not permitted unless authorised by Volkswagen AG. Volkswagen AG does not guarantee or accept any liability with respect to the correctness of information in this document. Copyright by Volkswagen AG.

satelettronica

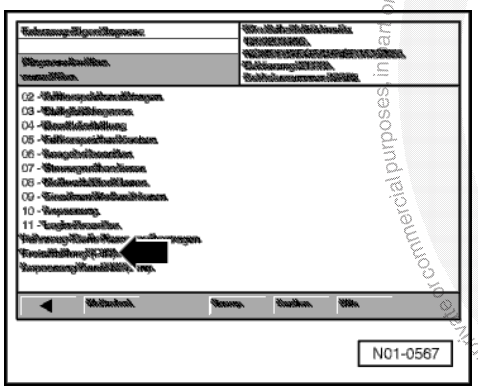

◀ Indicated on display:

- Press "Activating (PIN)" on display -arrow-.

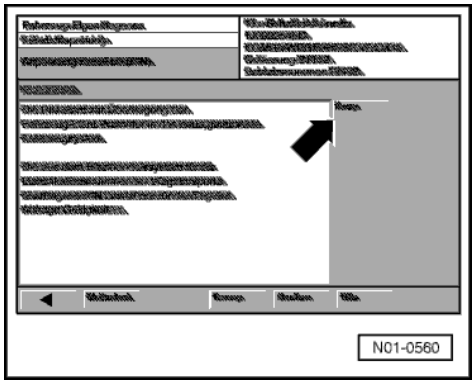

◀ Indicated on display:

- Confirm note -arrow-.

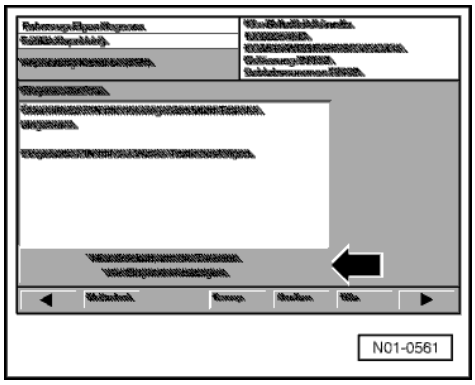

◀ Indicated on display:

- Confirm note -arrow-.

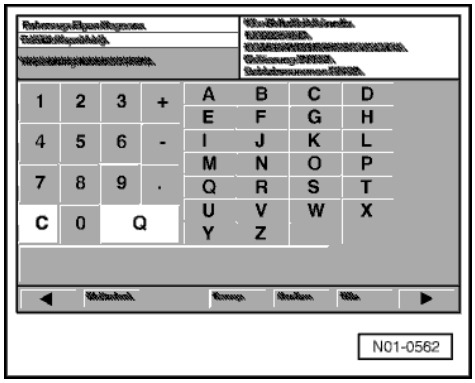

◀ Indicated on display:

- Enter 7-digit PIN using number block.
- Press ⇒ key.

Protected by copyright. Copying for private or commercial purposes, in part or whole, is not permitted unless authorised by Volkswagen AG. Volkswagen AG does not guarantee or accept any liability with respect to the correctness of information in this document. Copyright by Volkswagen AG.

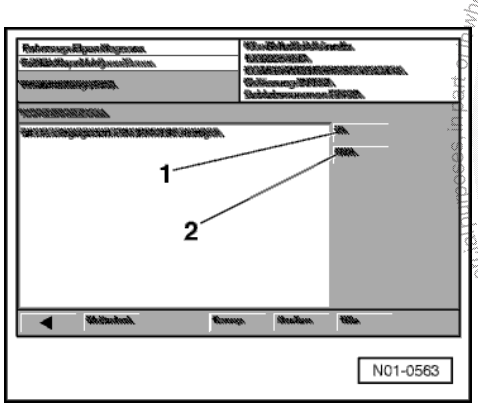

◀ Indicated on display:

- Check entered PIN.
- If PIN is correct, confirm with "Yes" -1-.
- If PIN is not correct, press button "No" -2- and enter PIN again using number block.

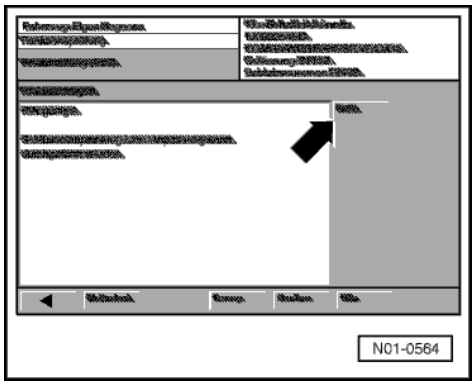

◀ Indicated on display:

- Confirm note -arrow-.

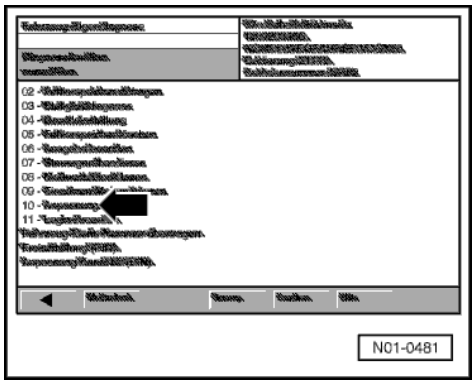

◀ Indicated on display:

- Press "10 - Adaption" on display -arrow-.

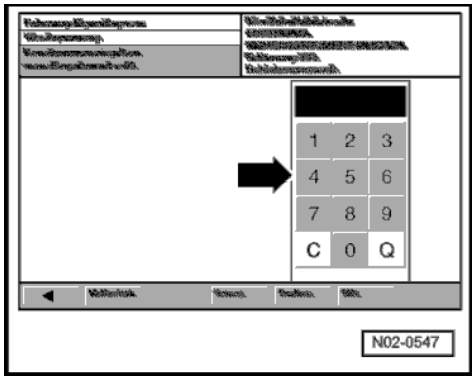

◀ Indicated on display:

- Press keys 0 and 0 on the display number block -arrow-.
- Confirm entry with Q key on display number block.
- Confirm message "Erase learnt values".
- Switch ignition off and on again after 5 seconds.

Note:

The engine may only be started after a period of 2 minutes.

- End output => page 01-12.

Copyright by Volkswagen AG. Volkswagen AG does not guarantee or accept any liability with respect to the correctness of information in this document. Copyright by Volkswagen AG. Protected by copyright. Copying for private or commercial purposes, in part or in whole, is not permitted unless authorised by Volkswagen AG.

Procedure after changing engine control unit (Adaption)

Note:

If the display is not as per the display in the work sequence:

=> Operating instructions for Vehicle Diagnosis, Testing and Information System VAS 5051.

- Connect Vehicle Diagnosis, Measuring and Information System VAS 5051, select operating mode "Vehicle self-diagnosis", switch on ignition and select "25 - Immobilizer".

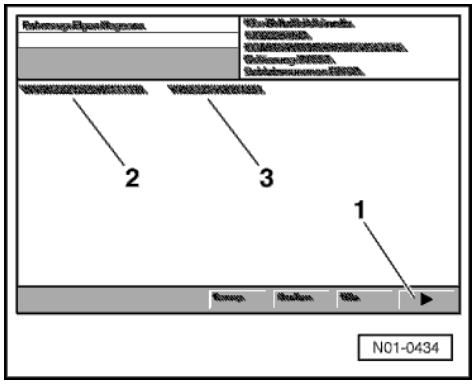

◀ Indicated on display:

- Obtain PIN according to chassis number -2- stored in the immobilizer control unit and identification number -3-.
- Press arrow button -1- on display.

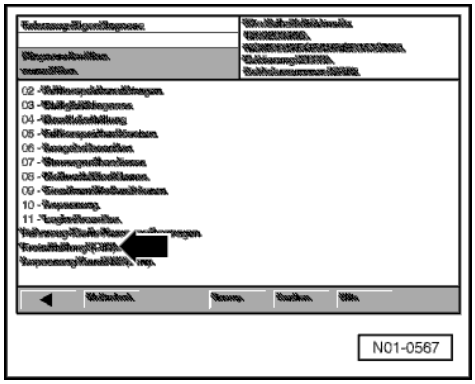

◀ Indicated on display:

- Press "Activating (PIN)" on display -arrow-.

satelettronica

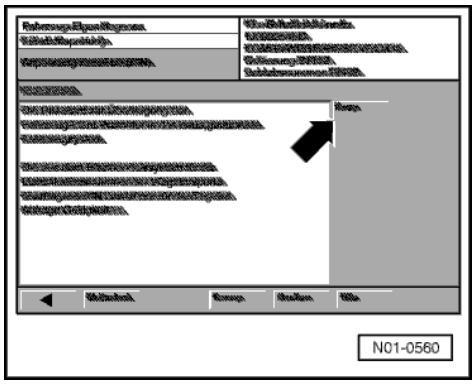

◀ Indicated on display:

- Confirm note -arrow-.

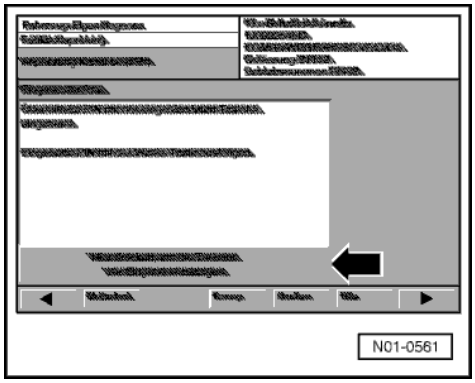

◀ Indicated on display:

- Confirm note -arrow-.

satelettronica

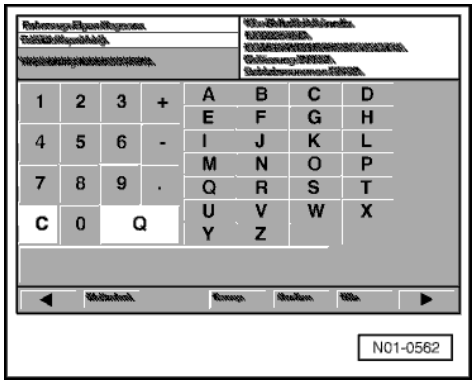

◀ Indicated on display:

- Enter 7-digit PIN using number block.
- Press ⇒ key.

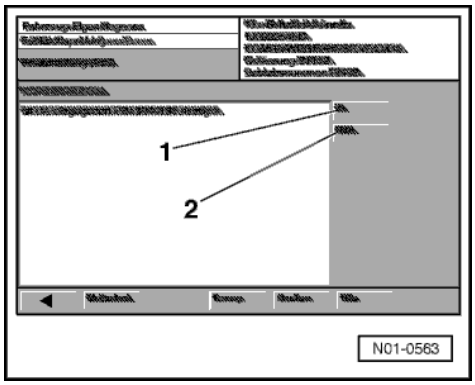

◀ Indicated on display:

- Check entered PIN.
- If PIN is correct, confirm with "Yes" -1-.
- If PIN is not correct, press button "No" -2- and enter PIN again using number block.

Protected by copyright. Copying for private or commercial purposes, in part or in whole, is not permitted unless authorised by Volkswagen AG. Volkswagen AG does not guarantee or accept any liability with respect to the correctness of information in this document. Copyright by Volkswagen AG.

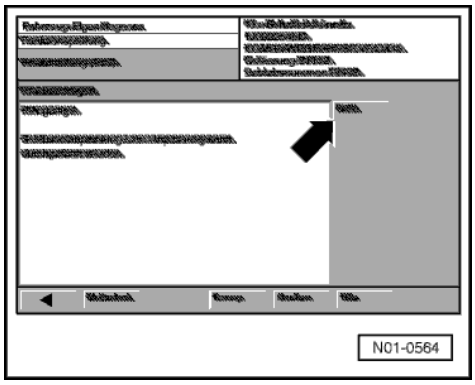

◀ Indicated on display:

- Confirm note -arrow-.

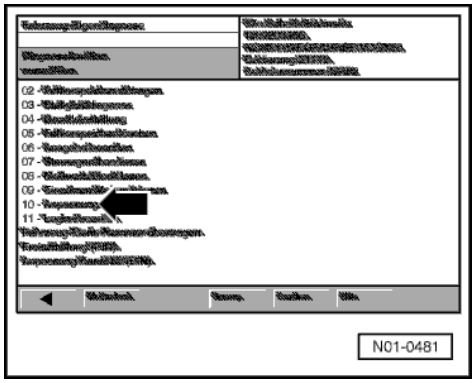

◀ Indicated on display:

- Press "10 - Adaption" on display -arrow-.

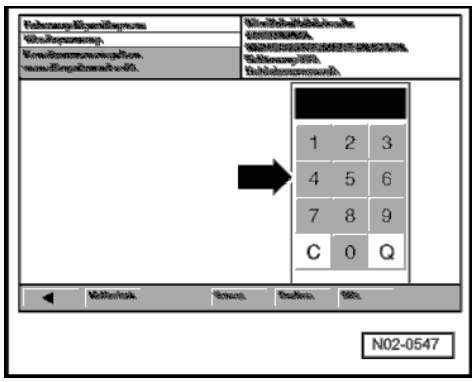

◀ Indicated on display:

- Press keys 0 and 0 on the display number block -arrow-.
- Confirm entry with Q key on display number block.
- Confirm message "Erase learnt values".
- Switch engine off and on again after 5 seconds.

Note:

The engine may only be started after a period of 2 minutes.

- End output => page 01-12.

satelettronica
Protected by copyright. Copying for private or commercial purposes, in part or in whole, is not permitted unless authorised by Volkswagen AG. Volkswagen AG does not guarantee or accept any liability with respect to the correctness of information in this document. Copyright by Volkswagen AG.

Procedure when immobilizer control unit and engine control unit have been changed

If both control units must be changed in a vehicle, then all ignition keys must be renewed as well. Learning of keys must be performed finally.

The control units must be ordered from the parts supplier according to the vehicle identification number and the engine code.

- Fitting of new components.
- Adapt engine control unit => page 01-38.
- Adapt all ignition keys => page 01-23.

Procedure for immobilizer malfunctions

Prerequisites:

- Voltage supply OK.
- Diagnosis wire between dash panel insert and VAS 5051 OK.
- Valid current flow diagram and Workshop Manual available.

Malfunction:

♦ Engine does not start

When starting the engine starts and stalls after approx. 1 second.

Note:

If the display is not as per the display in the work sequence:

satelettronica

Copyright by Volkswagen AG. Volkswagen AG does not guarantee or accept any liability with respect to the correctness of information in this document. Copying for private or commercial purposes, in part or in whole, is not permitted unless authorised by Volkswagen AG.

=> Operating instructions for Vehicle Diagnosis, Testing and Information System VAS 5051.

- Connect Vehicle diagnosis, Testing and Information system VAS 5051, select operating mode "Vehicle self-diagnosis", switch on ignition and select "01 - Engine Electronics".

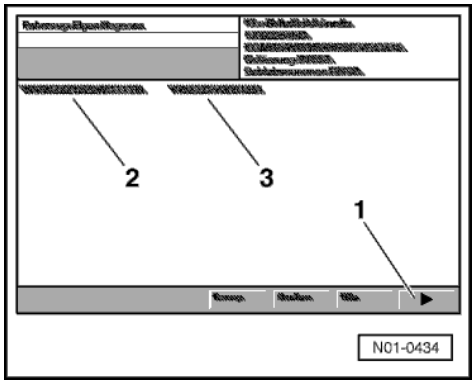

◀ Indicated on display:

- Press arrow button -1- on display.
- Interrogate fault memory => page 01-9.

Possible cause:

♦ Fault code 17978 -"Engine control unit blocked" is stored in fault memory, this means:

Note:

The immobilizer control unit has not released the engine control unit!

- Erase fault memory and end output => page 01-9.
- Press "25 - Immobilizer" on display -arrow-.
- Read fault memory (function 02) and evaluate using fault table =>page 01-13 and if necessary rectify.
- After completing repair and adapting immobilizer components it is absolutely necessary that the engine control unit fault memory is interrogated and if necessary the fault memory erased.

- Fault code 17978 "Engine control unit blocked" is not stored in fault memory, this means:

Note:

There is no malfunction of the electronic immobilizer!

- Carry out fault finding according to instructions in engine workshop manual.

Malfunction:

- Key adaption faulty

Fault code 01179 "Key programming faulty" is stored in fault memory of immobilizer control unit.

- Adapt all ignition keys to correct PIN => page 01-23.

Activating used engine control unit

- Adapt engine control unit => page 01-38.

Protected by copyright. Copying for private or commercial purposes, in part or in whole, is not permitted unless authorised by Volkswagen AG. Volkswagen AG does not guarantee or accept any liability with respect to the correctness of information in this document. Copyright by Volkswagen AG.

satelettronica

Battery

Battery contents list

Subject	Page
Battery handling instructions	27-4
Warnings and safety procedures when handling lead-acid batteries	27-6
Batteries with condition indicator	27-6
Visual check	27-7
Checking electrolyte level (batteries with condition indicator)	27-8
Batteries without condition indicator	27-11
Visual check	27-11
Checking electrolyte level	27-12
Checking specific gravity	27-17
Battery discharge test	27-21
Battery charging	27-22
Removing and installing battery	27-26
Explanation of central gas venting	27-33

The following chapter contains repair information for the battery.

Fundamentals for batteries

Note:

- Due to technical reasons in production there are two different types of batteries installed.
- Batteries condition indicator =>27-11.
- The following brief description is intended to provide information about which batteries are fitted due to technical differences.

Brief description

- Batteries with white housing, hard lead coated electrode plates, visible cell plugs and no condition indicator (low maintenance).
- Batteries with black housing, lead calcium coated electrode plates, condition indicator and sealed cell plugs (maintenance-free).

Note:

In this workshop manual, we have revised and documented the work content and procedures according to the latest information available. This means that checking and servicing batteries will now be easier and time-saving. It is sufficient for you to perform the following work content and procedures and those described in the 'Brief information' and on the following pages for each battery type. As a pre-requisite, you must use the tools as prescribed in the workshop manual.

Brief information

Protected by copyright. Copying for private or commercial purposes, in part or in whole, is not permitted unless authorised by Volkswagen AG. Volkswagen AG does not guarantee or accept any liability with respect to the correctness of information in this document. Copyright by Volkswagen AG.

satelettronica

- Batteries with condition indicator: visual check of housing, battery terminals and clamps, visual check of electrolyte level and specific gravity by means of condition indicator, if necessary battery discharge test.
- Batteries without condition indicator: visual check of housing, battery terminals and clamps, visual check of electrolyte level, specific gravity check with commercially available hydrometer, if necessary battery discharge test.

The battery is one of the most important electrical components in a vehicle. A trouble free battery has a great influence on customer satisfaction. To ensure long use of the battery, the battery must be checked, serviced and maintained as per the instructions in this Manual.

Apart from starting, the battery has other tasks: It acts as a buffer and supplies electrical energy to the complete vehicle electrical system.

The battery has also gone through a technical change and further development will continue. But today it is not possible, for reasons of physical/chemical limits, to have a completely maintenance free battery in a vehicle.

Thanks to constructive and physical changes of the positive electrode plates and to lead calcium coating, a new generation of batteries has been manufactured. The advantage of these batteries is the low electrolyte consumption. The batteries require the minimum of maintenance over a long period of time. Checking charge and electrolyte levels has become easier due to the condition indicator. Battery handling instructions for batteries with a condition indicator can be found under the heading "Batteries with condition indicator".

Battery handling instructions

- Battery terminals must no longer be greased.
- Battery terminal clamps must only be fitted by hand without force, this prevents damage to battery housing.

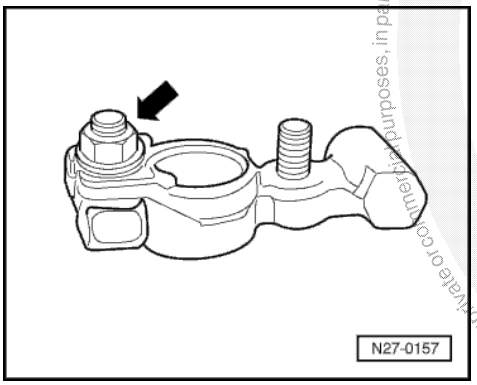

- The tightening torque for the battery terminal clamp is 6 Nm.
- The tightening torque for the additional terminals on the battery terminal clamp is 6 Nm.
- Check vehicle equipment (radio, clock and convenience electrics etc.) according to Workshop Manual and/or Owner's Manual when the battery has been disconnected and then reconnected.

Protected by copyright. Copying for private or commercial purposes, in part or in whole, is not permitted unless authorised by Volkswagen AG. Volkswagen AG does not guarantee or accept any liability with respect to the correctness of information in this document. Copyright by Volkswagen AG.

satelettronica

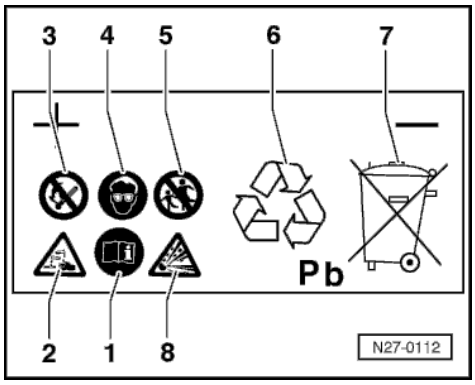

Warnings and safety procedures when handling lead-acid batteries

- - Follow instructions on battery, in Electrical system workshop manual and in Owner's manual.
- 2 -Danger from acid burns:
  - Battery acid is very caustic, therefore wear eye protection and gloves;
  - Do not tilt battery. Acid can leak out of the gas vents.
- 3 -Fires, sparks, naked lights and smoking prohibited:
  - Avoid sparks when working with cables and electrical units.
  - Avoid short circuits.
- 4 -Wear eye protection
- 5 -Keep children away from acid and batteries.
- 6 -Disposal:
  - Dispose of old batteries at a battery collection point.
- 7 -Never dispose of old batteries in household waste system !
- 8 -Danger of explosion:
  - A highly explosive gas is produced when charging batteries.

Batteries with condition indicator

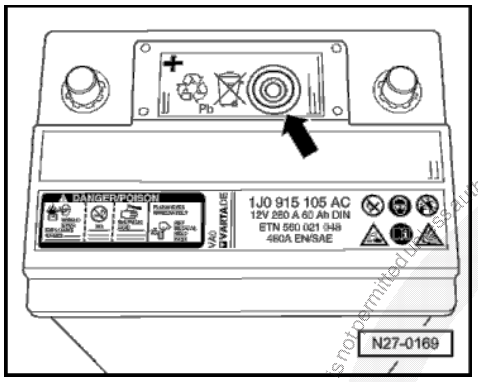

Identification

- Batteries with a condition indicator are produced with a black housing.
- The condition indicator -arrow- provides information concerning the electrolyte level and charge condition.

Note:

- The condition indicator can be located at various positions on the battery depending on the manufacturer (e.g. in any of the cell plug positions).
- Three different colour displays are possible:
  - Green ⇒the battery is charged sufficiently.
  - Black ⇒ not charged or charged insufficiently=>Page 27-22.
  - Colourless or yellow ⇒ the critical electrolyte level has been reached, it is absolutely necessary to top up with distilled water.
- Please note when the condition indicator is colourless and the battery is more than 5 years old it must be replaced.

Note:

Air bubbles can form under the condition indicator especially if a battery has been charged, i.e. even when the battery is charged during driving. This falsifies the colour display of the condition indicator.

- Before a visual check is performed, tap the condition indicator lightly and carefully with the handle of a screwdriver.

Protected by copyright. Copying for private or commercial purposes, in part or in whole, is not permitted unless authorised by Volkswagen AG. Volkswagen AG does not guarantee or accept any liability with respect to the correctness of information. Copyright by Volkswagen AG.

satelettronica

The air bubbles will dissipate.

Reading the coloured display of the condition indicator will therefore be more accurate.

Visual check

It is important to first check the condition of the battery visually before any more complicated tests are carried out in order to satisfy the demands on quality expected by our organisation and our customers.

Performing this test establishes:

- Whether the battery housing is damaged.
  Electrolyte can leak out if the housing is damaged.
- Whether the battery terminals (battery wiring/cable connections) are damaged.
  The contact on the terminals cannot be guaranteed if the terminals are damaged. Take note when fitting clamps to the terminals that these are tightened to the prescribed torque stated in this Workshop Manual. If the clamps are not located correctly and are then tightened, the cable or wiring could spark or burn, which in turn could lead to malfunctions in the electrical system. In this case the correct functioning of the vehicle systems could be considerably impaired.

Checking electrolyte level (batteries with condition indicator)

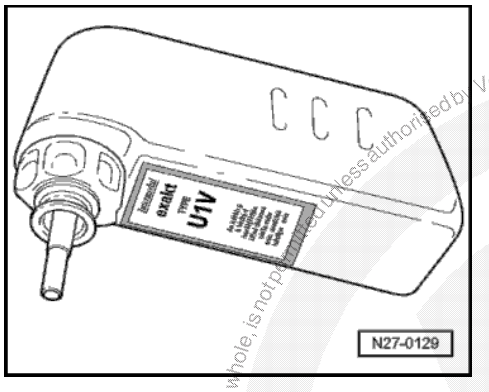

Special tools, testers, measuring units and auxiliary items required

- VAS 5045 Battery filling bottle

Warning!

When using sulphuric acid it is absolutely necessary to adhere to the accident prevention procedures.

Suitable protective clothing must be worn.

Only use a torch to illuminate the inside of the battery housing.

satelettronica
Protected by copyright. Copying for private or commercial purposes, in part or in whole, is not permitted unless authorised by Volkswagen AG. Copyright by Volkswagen AG. Volkswagen AG does not guarantee or accept any liability with respect to the correctness of information in this document.

Warning!

Never illuminate the inside of a battery housing with an open flame.

Never work with an open flame or burning cigarette in the vicinity of a battery.

Ensure the legislation for the disposal of batteries and sulphuric acid is observed when disposing batteries.

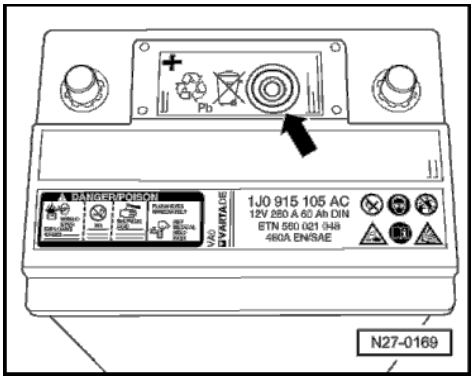

Note:

- The electrolyte level can be read at the condition indicator -arrow-.
- If the colour indicator is colourless or yellow, it is absolutely necessary to top up distilled water.

A correct electrolyte level in the battery is an important factor in ensuring a long battery service life.

An insufficient electrolyte level allows the battery plates to dry which results in a loss of capacity (reduced output) of the battery. If the cell plates are not covered by electrolyte the plates, the plate bridges and the cell connections will corrode. This corrosion ensures the battery function can no longer be guaranteed. The battery is unusable.

If the electrolyte level is too high, damage will be caused outside the battery by the leaking battery acid (sulphuric acid/water mixture) e.g. components in engine compartment.

Notes:

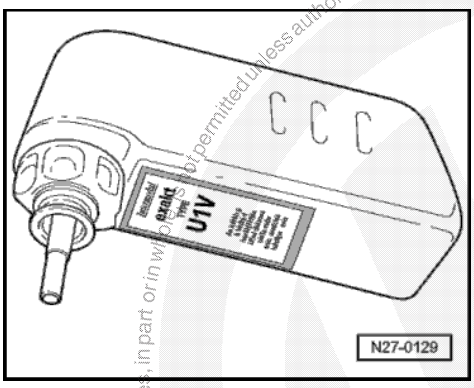

- If the electrolyte level is low, the filler bottle VAS 5045 is the ideal tool to top-up the battery. The design of the filler nozzle prevents any spilling or over filling. Once the maximum fill level has been reached, further filling of the battery is prevented due to the special nozzle feature of the filler bottle VAS 5045.
- Use distilled water only, this prevents contamination of the battery electrolyte and the therefore associated increased self discharge.
- If, for technical reasons, batteries are equipped with cell plugs, these are covered with a plastic foil.
- If in place of a cell plug a condition indicator is fitted, this obviously will not be covered.

- If the electrolyte level is not OK, correct as follows:
- Remove battery cell plug.
- If the electrolyte level is too low, fill with distilled water using only the battery filling bottle VAS 5045 up to the max. marking. The battery filling bottle VAS 5045 is the ideal tool for this purpose.

Note:

If you had to top up distilled water, again perform a battery discharge test.

Protected by copyright. Copying for private or commercial purposes, in part or in whole, is not permitted unless authorised by Volkswagen AG. Volkswagen AG does not guarantee or accept any liability with respect to the correctness of information in this document. Copyright by Volkswagen AG.

satelettronica

- Battery discharge test =>Page 27-21

Batteries without condition indicator

Visual check

It is important to first check the condition of the battery visually before any more complicated tests are carried out in order to maintain the demands on quality expected by our organisation and our customers.

Performing this test establishes:

- Whether the battery housing is damaged.
  Electrolyte can leak out if the housing is damaged.
- Whether the battery terminals (battery wiring/cable connections) are damaged.
  The contact on the terminals cannot be guaranteed if the terminals are damaged. Take note when fitting clamps to the terminals that these are tightened to the prescribed torque stated in this Workshop Manual. If the clamps are not located correctly and are then tightened, the cable or wiring could spark or burn, which in turn could lead to malfunctions in the electrical system. In this case the correct functioning of the vehicle systems could be considerably impaired.

satelettronica

Checking electrolyte level

Special tools, testers, measuring units and auxiliary items required

- Commercially available hydrometer

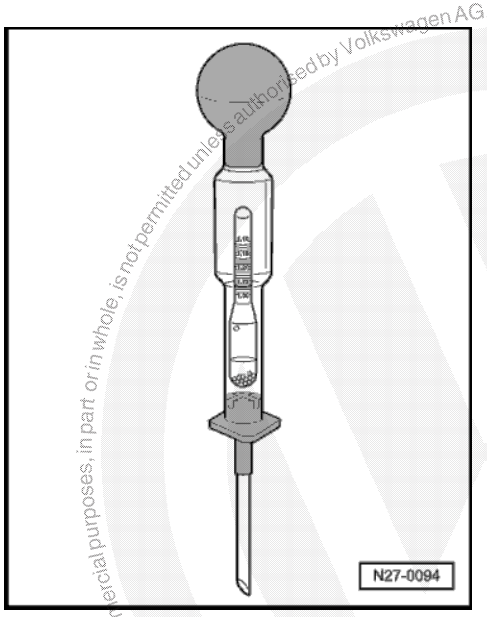

Protected by copyright. Copying for private or commercial purposes, in part or in whole, is not permitted unless authorised by Volkswagen AG. Volkswagen AG does not guarantee or accept any liability with respect to the correctness of information in this document. Copyright by Volkswagen AG.

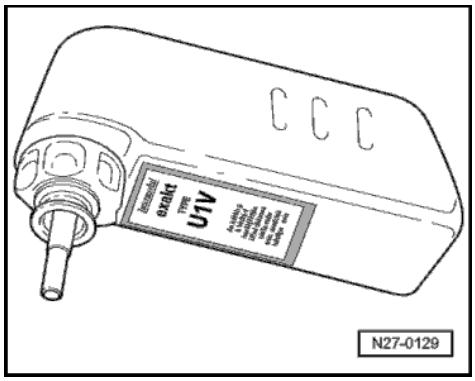

♦ VAS 5045 Battery filling bottle

Warning!

When using sulphuric acid it is absolutely necessary to adhere to the accident prevention procedures.

Suitable protective clothing must be worn.

Only use a torch to illuminate the inside of the battery housing.

Warning!

Never illuminate the inside of a battery housing with an open flame.

Never work with an open flame or burning cigarette in the vicinity of a battery.

Ensure the legislation for the disposal of batteries and sulphuric acid is observed when disposing batteries.

A correct electrolyte level in the battery is an important factor in ensuring a long battery service life.

satelettronica

Protected by copyright. Copying for private or commercial purposes, in part or in whole, is not permitted unless authorised by Volkswagen AG. Volkswagen AG does not guarantee or accept any liability with respect to the correctness of information in this document. Copyright by Volkswagen AG.

An insufficient electrolyte level allows the battery plates to dry which results in a loss of capacity (reduced output) of the battery. If the cell plates are not covered by electrolyte the plates, the plate bridges and the cell connections will corrode. This corrosion ensures the battery function can no longer be guaranteed. The battery is unusable.

If the electrolyte level is too high, damage will be caused outside the battery by the leaking battery acid (sulphuric acid/water mixture) e.g. components in engine compartment.

A visual check of the battery electrolyte level is all that is required on batteries with a recognisable minimum and maximum marking.

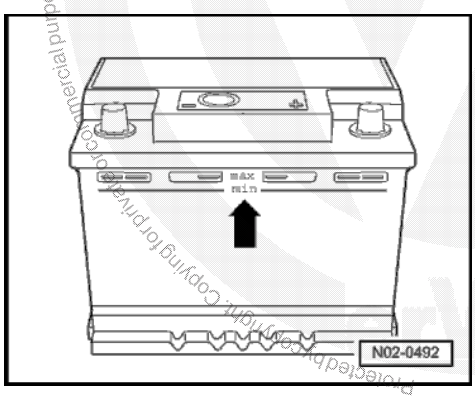

- Switch off ignition.
- Check electrolyte level visually at the min. and max. markings on the battery housing.

The electrolyte level is OK when the fluid level is between the minimum and maximum marking.

- Check electrolyte level visually. Look inside the battery.

If no min. and max. markings are visible on the battery housing or the electrolyte level is not visible, the sealing plugs must be removed.
Then you can check the electrolyte level by looking inside the battery housing.

The electrolyte level is OK when the fluid level is the same height as the visible plastic peg or the cell plates are covered.

The plastic peg equates to the max, marking for the electrolyte level.

Notes:

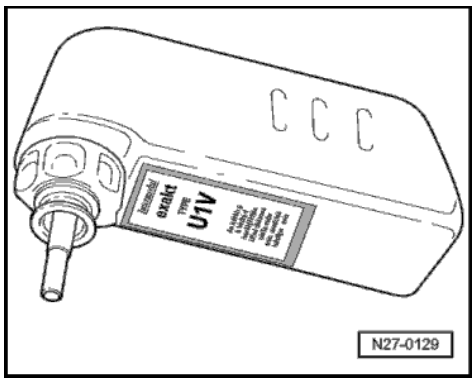

- If the electrolyte level is low, the filler bottle VAS 5045 is the ideal tool to top-up the battery. The design of the filler nozzle prevents any spilling or over filling. Once the maximum fill level has been reached, further filling of the battery is prevented due to the special nozzle feature of the filler bottle VAS 5045.
- Use distilled water only, this prevents contamination of the battery electrolyte and the therefore associated increased self discharge.

- If the electrolyte level is not OK, correct as follows:
- Remove battery cell plug.
- If the electrolyte level is too low fill with distilled water using only the battery filling bottle VAS 5045 up to the max. marking. The battery filling bottle VAS 5045 is the ideal tool for this purpose.

Note:

If you had to top up distilled water, perform a battery discharge test.

- Battery discharge test =>Page 27-21

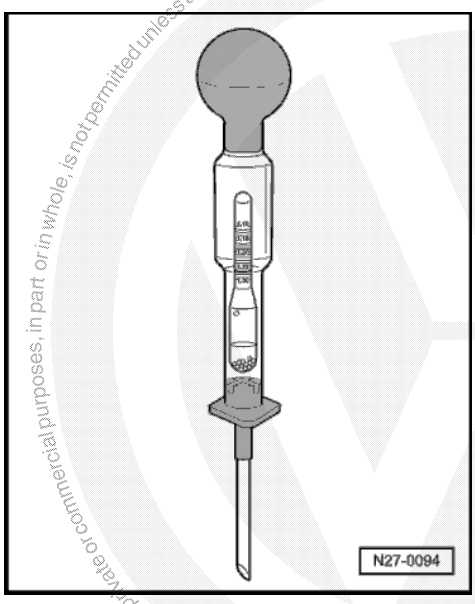

- If the electrolyte level is too high, use battery filling bottle VAS 5045 to extract excessive electrolyte until the fluid level is the same as the inner level marking, the plastic peg.
- Once the battery has been topped up or the electrolyte level has been reduced to normal the cells must be sealed only with the original cell plugs.

It is absolutely necessary to use original sealing plugs in the battery screwed openings to guarantee the battery is sealed correctly.

Use original sealing plugs of same construction if lost or damaged.

The sealing plugs must be fitted with an O-ring.

Protected by copyright. Copying for private or commercial purposes, in part or in whole, is not permitted unless authorised by Volkswagen AG. Volkswagen AG does not guarantee or accept any liability with respect to the correctness of information in this document. Copyright by Volkswagen AG.

satelettronica

Checking specific gravity

Note:

The following specific gravity test should only be performed on batteries without condition indicator.

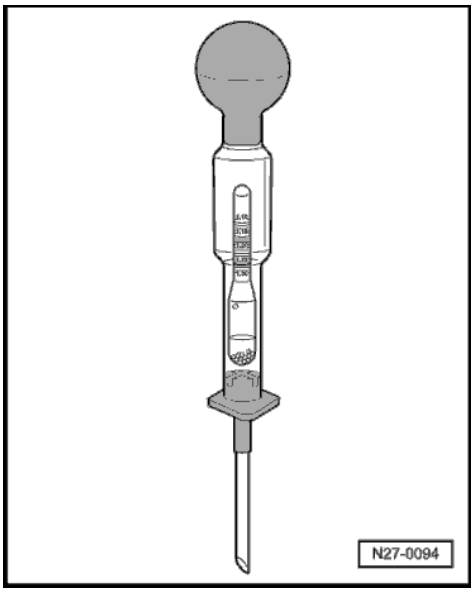

Special tools, testers, measuring units and auxiliary items required

- Commercially available hydrometer
- Cleaning cloths

Warning!

When using sulphuric acid it is absolutely necessary to adhere to the accident prevention procedures.

Suitable protective clothing must be worn.

Only use a torch to illuminate the inside of the battery housing.

satelettronica

Protected by copyright. Copying for private or commercial purposes, in part or in whole, is not permitted unless authorised by Volkswagen AG. Volkswagen AG does not guarantee or accept any liability with respect to the correctness of information in this document. Copyright by Volkswagen AG.

Warning!

Never illuminate the inside of a battery housing with an open flame.

Never work with an open flame or burning cigarette in the vicinity of a battery.

Ensure the legislation for the disposal of batteries and sulphuric acid is observed when disposing batteries.

The electrolyte specific gravity test and the battery load test provide information about the battery condition.

The electrolyte temperature must be at least 10°C.

The specific gravity must be checked in all battery cells as follows:

- Switch off ignition.
- Remove all battery plugs (battery cell sealing plugs).

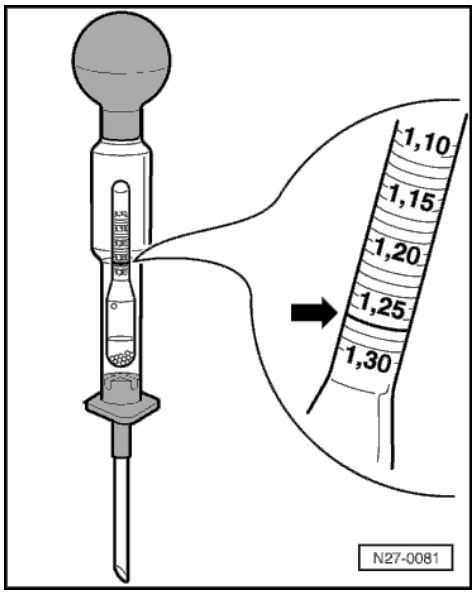

- Immerse end of hydrometer in a cell and extract sufficient electrolyte so that float swims free in the electrolyte.

The denser the extracted electrolyte the higher the float swims.

The density in kg/dm3 can be read off the scale of the hydrometer (specific density of electrolyte).

- Read off measured value on hydrometer and compare with table:

Charge condition in normal climatic zones	**Specific densities in kg/dm3**
Discharged	1.15
Half charged	1.22
Well charged	1.28

The electrolyte density must be at least 1.24kg/dm3.

- Charge battery if electrolyte density (specific gravity) is insufficient.
- Repeat electrolyte density (specific gravity) check after charging battery.

The measured value for the specific gravity of the individual battery cells must not differentiate in more than 0.03 kg/dm3.

Example of unacceptable deviations in specific gravity:

Battery cell:	1	2	3	4	5	6
	Electrolyte density per cell in kg/dm3					
Example 1:	1.24	1.25	1.25	1.10	1.24	1.25
Example 2:	1.26	1.26	1.25	1.14	1.18	1.24

Example 1:

The specific gravity in cell 4 is too low.

Example 2:

The specific gravity in cells 4 and 5 is too low.
The electrolyte density deviations between the battery cells is more than 0.03 kg/dm3

- If the specifications are not obtained, renew battery.
- If the specifications are obtained, screw plugs in again.

It is absolutely necessary to use original sealing plugs in the battery screwed openings to guarantee the battery is sealed correctly.

Use original sealing plugs of same construction if lost or damaged.

The sealing plugs must be fitted with an O-ring.

- Use only genuine sealing plugs.

Protected by copyright. Copying for private or commercial purposes, in part or in whole, is not permitted unless authorised by Volkswagen AG. Volkswagen AG does not guarantee or accept any liability with respect to the correctness of information in this document. Copyright by Volkswagen AG.

satelettronica

Battery discharge (load) test

The specific gravity test on batteries without condition indicator, the colour of the condition indicator and the discharge test give information about the condition of the battery.

Note:

Only perform battery discharge test on batteries with condition indicator when the colour indicator is black or if the vehicle, in which the battery is fitted, has starting problems.

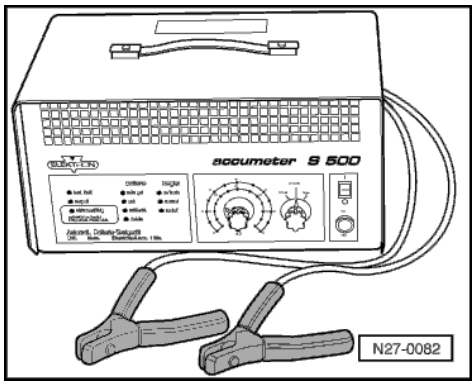

Special tools, testers, measuring instruments and auxiliary items required

♦ VAS 1979 or VAS 5033 Battery tester

Note:

It is not necessary to remove the battery when using battery test unit VAS 1979 or VAS 5033. The battery need not be disconnected.

Performing battery discharge (load) test

- Switch off ignition.
- Read Operating Instructions for battery test unit.
- Connect tester cable clamps to battery terminal as described in test unit instruction manual.

The clamps must have a good contact with the battery terminals.

- The use of the battery tester is described in the Operating instructions for battery test unit.

Explanation of battery load check:

Because of the high load on the battery during this test (a high current flows) the battery voltage lowers.

If the battery is OK the voltage value only lowers to the minimum voltage.

If the battery is defective or has a low charge the battery voltage quickly drops below the minimum voltage.

This low voltage value remains over a long period and the voltage only increases again slowly after the test has been completed.

Battery charging

Warning!

When using sulphuric acid it is absolutely necessary to adhere to the accident prevention procedures.

Suitable protective clothing must be worn.

Only use a torch to illuminate the inside of the battery housing.

Protected by copyright. Copyright by Volkswagen AG. Volkswagen AG does not guarantee or accept any liability with respect to the correctness of information in this document. Copying for private or commercial purposes, in part or in whole, is not permitted unless authorised by Volkswagen AG.
satelettronica

Warning!

Never illuminate the inside of a battery housing with an open flame.

Never work with an open flame or burning cigarette in the vicinity of a battery.

Ensure the legislation for the disposal of batteries and sulphuric acid is observed when disposing batteries.

Special tools, testers, measuring instruments and auxiliary items required

- Battery charging unit
- Batteries should be charged using a V.A.G battery charging unit e.g. V.A.G 1471, V.A.G 1648 or V.A.G 1974.

Notes:

- The battery must have a temperature of at least 10°C.
- Batteries must not be charged quickly; they are damaged when charging quickly.
- If heavily discharged batteries are charged quickly they accept no charge current, or indicate fully charged too early due to the so-called "Surface charging". Afterwards they are not OK.

Performing battery charging

Note:

Battery charging should only be performed with a V.A.G or VAS battery charging unit.

- Switch off battery charging unit.
- Switch off ignition.
- Connect battery charger positive cable to battery positive terminal.
- Connect battery charger negative cable to battery negative terminal.
- Set battery unit charge current according to battery capacity.
- Switch on battery charging unit.

Procedures for totally discharged batteries

Note:

Heavily discharged batteries can freeze in winter due to the high water content in the electrolyte. If a battery is frozen it must not be charged. The reason for this is because the housing becomes defective in a frozen state.

Remarks concerning totally discharged batteries:

Batteries that have not been used for a long time e.g. vehicles that have been stored, self-discharge.

On totally discharge batteries the electrolyte (sulphuric acid/water mixture) is almost all water, the sulphuric acid part is heavily reduced.

Totally discharged batteries sulphate, therefore all of the plate surfaces of the battery harden.

Protected by copyright. Copying for private or commercial purposes, in part or in whole, is not permitted unless authorised by Volkswagen AG. Volkswagen AG does not guarantee or accept any liability with respect to the correctness of information in this document. Copyright by Volkswagen AG.
satelettronica

If a totally discharged battery is charged again shortly after it has lost its charge, the sulphation will dissipate.

If these batteries are not recharged the plates continue to harden and the ability to recharge is reduced. A reduction in the battery output is the result.

Totally discharge batteries must be charged with a small charging current as follows:

- The charge current must be set at a maximum of 10 % of the battery capacity, therefore for a 60 Ah battery the charge current is a maximum 6A (ampere)

Charging battery => Page 27-22.

The charge period must be at least 24 hours.

Totally discharged batteries must never be charged quickly.

Copyright by Volkswagen AG. Volkswagen AG does not guarantee or accept any liability with respect to the correctness of information in this document. Copying for private or commercial purposes, in part or in whole, is not permitted unless authorised by Volkswagen AG.

satelettronica

Removing and installing battery

Special tools, testers, measuring instruments and auxiliary items required

- ♦ V.A.G 1331 Torque wrench (5 - 50 Nm)
- ♦ 10 mm Socket

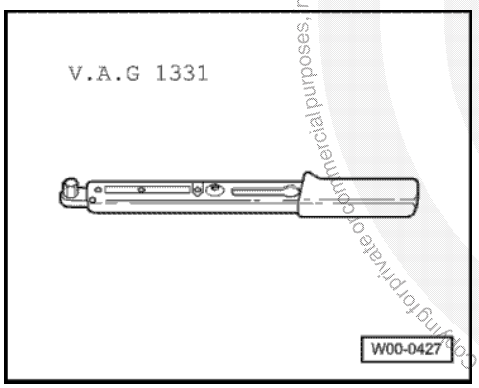

Removing battery:

Before the battery can be removed, the fuse holder on the battery must be removed.

- Switch off ignition.
- Disconnect battery earth strap on battery negative terminal first.

Removing and installing fuse holder on battery

Carry out work sequence as follows:

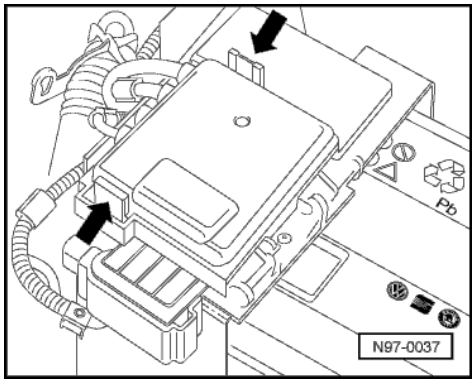

◀ - Press locking lugs -arrows- together to open fuse holder and take off cover.

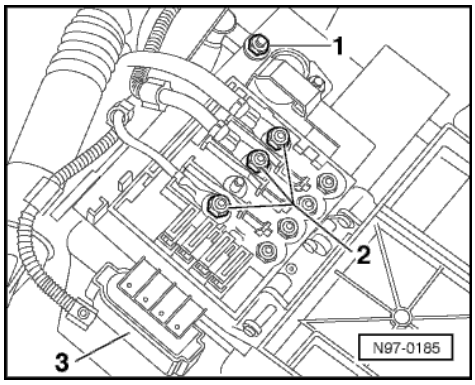

◀ - Remove securing nut -1- of conductor plate on (+) terminal clamp.

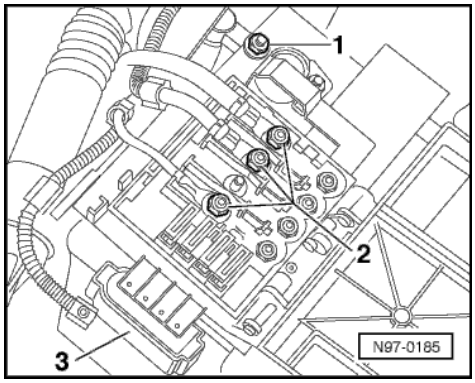

◀ - Remove securing nuts -2- to disconnect wiring to strip fuses.
- Pull off connector -3-.

Protected by copyright. Copying for private or commercial purposes, in part or in whole, is not permitted unless authorised by Volkswagen AG. Volkswagen AG does not guarantee or accept any liability with respect to the correctness of information in this document. Copyright by Volkswagen AG.

satelettronica

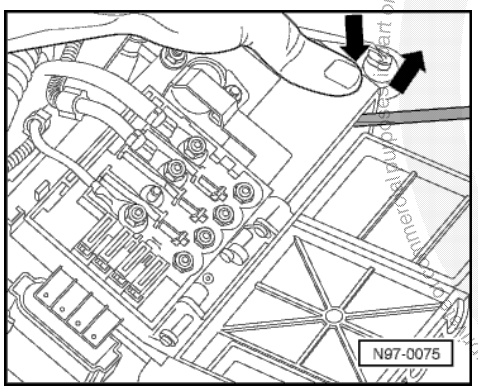

◀ - Release tension on fuse holder spring catch by pressing down with a thumb and lever spring catch locking device off battery using a suitable screwdriver.
- Remove fuse holder upwards from battery.

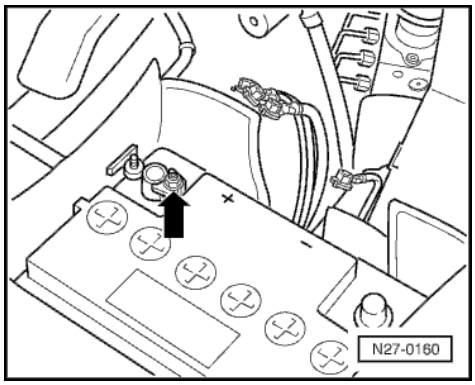

◀ - Then release the battery positive terminal clamp securing bolt -arrow-.

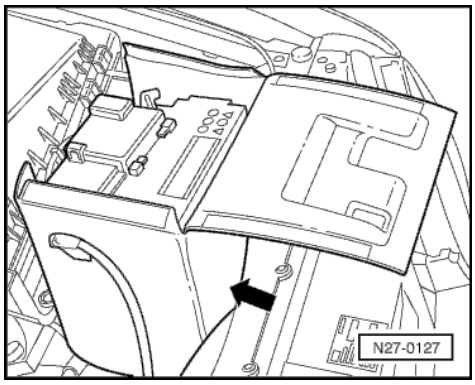

- The battery heat insulation jacket can only be opened and removed (if fitted) after first loosening the battery positive clamp and taking off of the battery positive terminal.

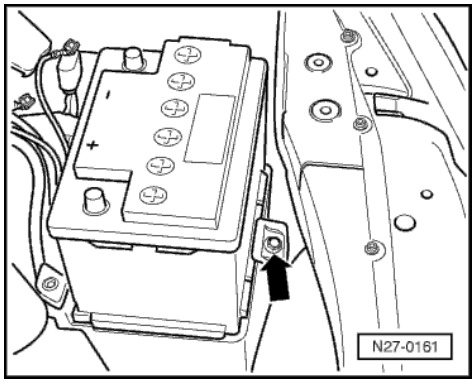

- Remove M8 x 25 hexagon bolt -arrow-.
- Remove battery clamping bracket

Installing battery:

Note:

When the battery is reconnected, check the vehicle equipment (radio, clock, electrical windows) as per Workshop Manual and/or the owner's manual.

satelettronica

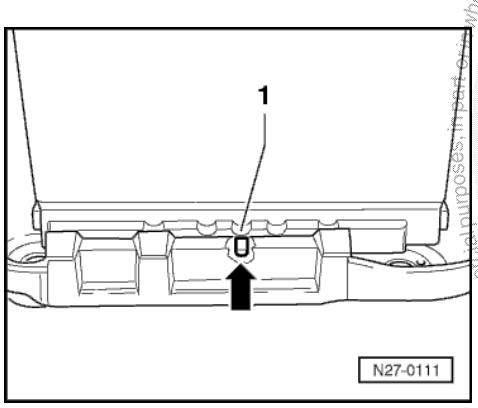

To guarantee the battery seats securely only install batteries with a 10.5 mm battery foot strip and adhere to the following work sequences:

- Install battery so that the lug of the battery carrier -arrow- engages in the battery base strip cut-out -1- .

It must not be possible to move a battery to the left or to the right.

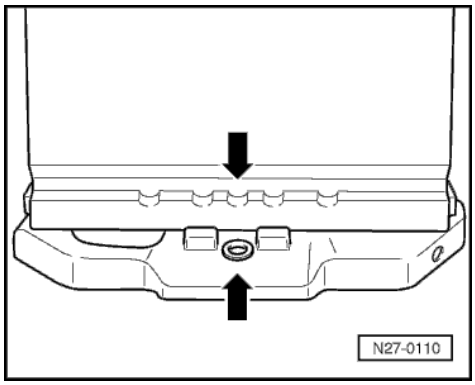

The battery is inserted correctly when the centre cut-out in the battery foot strip aligns with threaded hole in the battery carrier -arrows-.

- On batteries with a hose for central venting ensure that the hose is not squashed. Only then can the battery vent freely.
- Ensure that the opening on the upper side of the battery cover is not blocked on batteries without a hose for central venting.

Volkswagen AG. Volkswagen AG does not guarantee or accept any liability with respect to the correctness of information in this document. Copyright by Volkswagen AG. Copying for private or commercial purposes, in part or in whole, is not permitted unless authorised by Volkswagen AG.

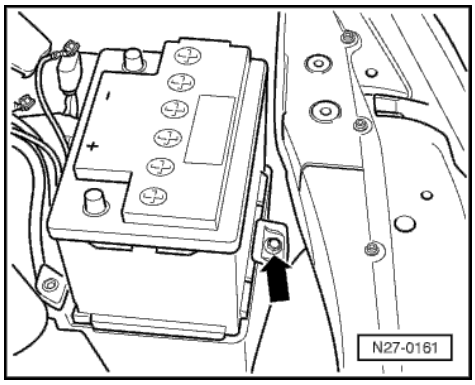

- Fit battery clamping bracket and tighten M8 x 25 securing bolt -arrow- to 22 Nm.
- Reinstall the heat insulation jacket if necessary.
- Fit positive wire clamp onto battery positive terminal.

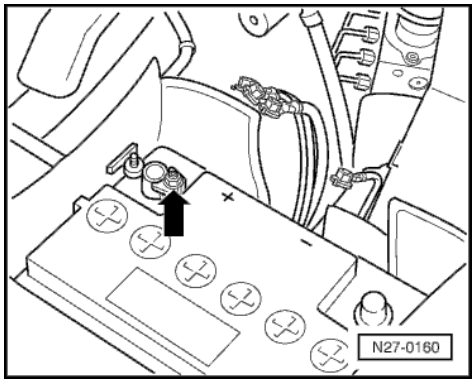

Notes:

- ♦ Battery terminal clamps must only be fitted by hand without force, this prevents damage to battery housing.
- ♦ Battery terminals must no longer be greased.

- Tighten battery positive terminal clamp securing screw -arrow- to 6 Nm.
- Fit fuse holder onto battery, when doing this fit current conductor plate onto securing pins on battery positive terminal.
- Engage fuse holder spring catch in battery.
- Tighten securing bolt to 6 Nm.

satelettronica

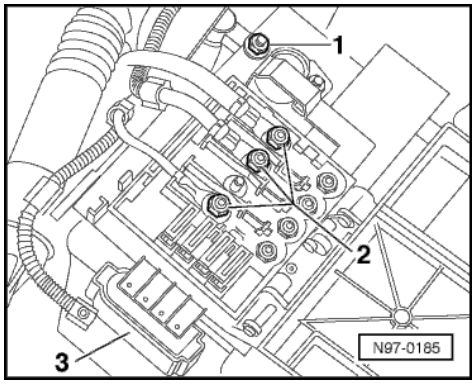

- Close heat insulation jacket if necessary.
- Tighten securing nuts -1- for current conductor plate on (+) positive terminal clamp.
- Connect wiring/cables to strip fuses again if they have been disconnected and tighten securing bolts -2-.

Note:

Obtain connector pin assignment from respective current flow diagram!

=> Current flow diagrams, Electrical fault finding and Fitting locations binder

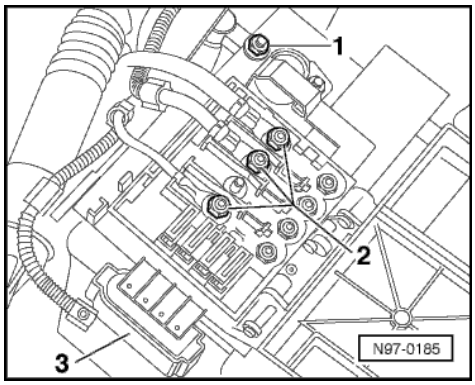

- Fit connections -3-.
- Fit fuse holder cover and close.
- After installing check battery is seated securely. The following dangers exist with a loosely fitted battery:
  - Shortened service life due to damage from vibration.
  - The cells in the battery will be damaged if the battery is not secured correctly.
  - Damage to battery housing by clamping bracket (possibility of acid leaking, therefore subsequent higher costs).
  - Poor crash safety

Volkswagen AG. Volkswagen AG does not guarantee or accept any liability with respect to the correctness of information in this document. Copyright by Volkswagen AG. Protected by copyright. Copying, distribution and utilisation is not permitted unless authorised by Volkswagen AG. Commercial purposes, in part or in whole, is not permitted unless authorised by Volkswagen AG.

Explanation of central gas venting

Functional notes for central venting:

- Batteries of the latest generation are equipped with a central venting system with an anti-flash protection.
- The anti - flash protection consists of a small round fibre glass mat with a diameter of approx. 15 mm and a thickness of 2 mm. It functions similar to a valve, therefore the gasses that form in the battery can vent.
- The gasses that form whilst charging can vent centrally through an opening on the upper side of the cover. The anti-flash protection is also fitted at this point which prevents ignition of the flammable gasses in the battery.

Different central gas vent forms of construction

There are two types of batteries with central gas vents:

- Batteries with a hose on central gas vent
- Batteries without a hose on central gas vent

It is absolutely necessary to use original sealing plugs in the battery screwed openings to guarantee the battery is sealed correctly.

Use original sealing plugs of same construction if lost or damaged.

The sealing plugs must be fitted with an O-ring.

Starter

Warning!

Before working on the electrical system disconnect the battery earth strap.

Notes:

- If the vehicle has a security-coded radio, obtain the correct anti-theft code number before disconnecting the battery.
- Check vehicle equipment (radio, clock and convenience electrics etc.) according to Workshop Manual and/or Owner's Manual when the battery has been disconnected and then reconnected.
- Notes concerning the removal and installation of the starter bush can also be found in

=> Repair group 34

=> Repair group 37

Protected by copyright. Copying for private or commercial purposes, in part or in whole, is not permitted unless authorised by Volkswagen AG. Volkswagen AG does not guarantee or accept any liability with respect to the correctness of information in this document. Copyright by Volkswagen AG.

satelettronica

Removing and installing starter (1.4 ltr. petrol engine)

Special tools, testers, measuring instruments and auxiliary items required

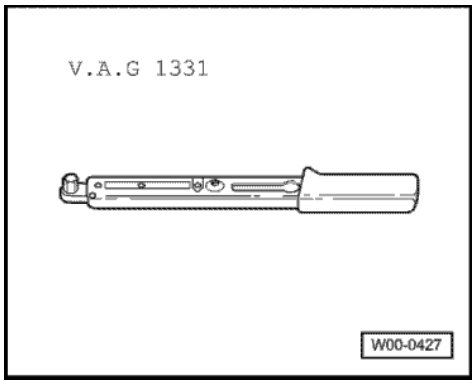

♦ V.A.G 1331 Torque wrench (5 - 50 Nm)

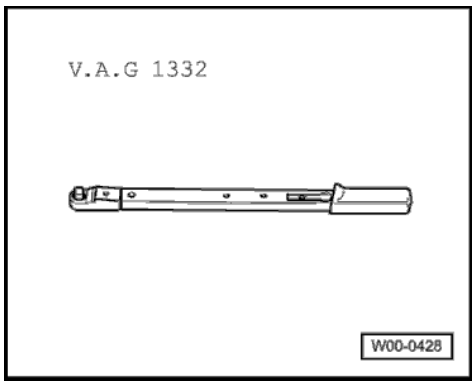

♦ V.A.G 1332 Torque wrench (40 - 200 Nm)

Removing:

- Disconnect earth strap at battery.

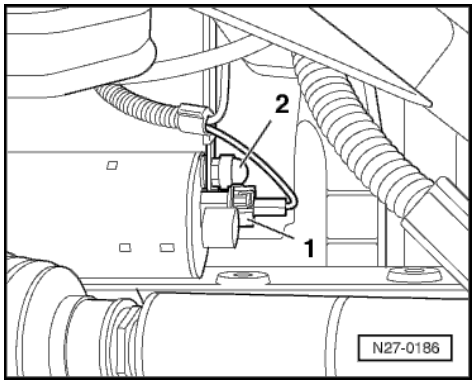

◀ - Release and pull off connector terminal 50 -1-.
- Remove plastic cap -2- and disconnect wire from solenoid terminal 30.

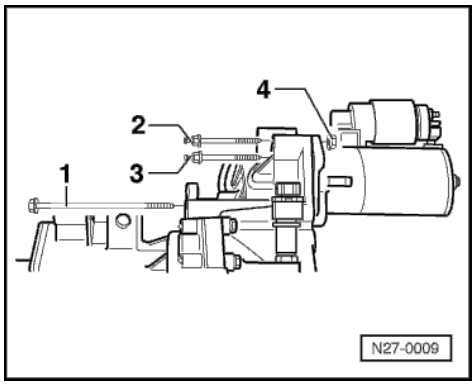

◀ - Unscrew hexagon bolt -1-.
- Unscrew hexagon nut -4-.
- Unscrew hexagon bolt -3- and remove bolt -2-.
- Remove starter downwards.

Installing:

- Position starter.

Protected by copyright. Copying for private or commercial purposes, in part or in whole, is not permitted unless authorised by Volkswagen AG. Volkswagen AG does not guarantee or accept any liability with respect to the correctness of information in this document. Copyright by Volkswagen AG.
satelettronica

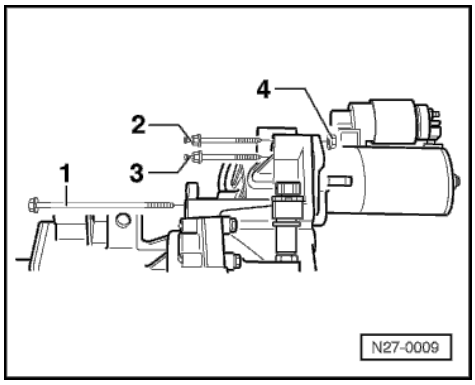

◀ - Screw in hexagon bolts -1- and -3- hand tight.
- Insert hexagon bolt -2- and screw on hexagon nut -4- hand tight.
- Tighten hexagon bolts -1- and -2- and also hexagon nut -4-.

Torque settings:
Hexagon bolt -1-: 45 Nm
Hexagon bolt -3-: 60 Nm
Hexagon nut -4-: 60 Nm

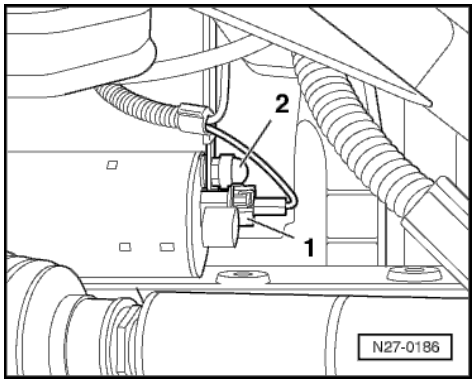

◀ - Release and pull off connector terminal 50 -1-
- Screw on wire to solenoid (terminal 30) and tighten to 13 Nm. Then press on plastic cap -2-.

satelettronica

Removing and installing starter (1.6 ltr., 1.8 ltr. petrol engine and diesel engine)

Special tools, testers, measuring instruments and auxiliary items required

♦ V.A.G 1331 Torque wrench (5 - 50 Nm)

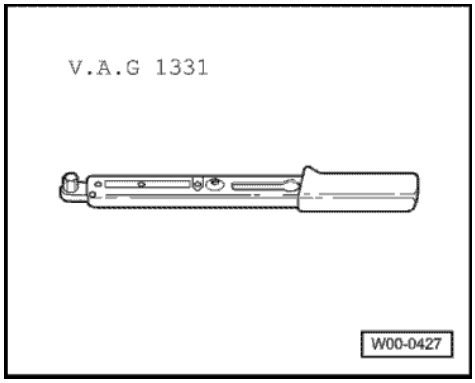

♦ V.A.G 1332 Torque wrench (40 - 200 Nm)

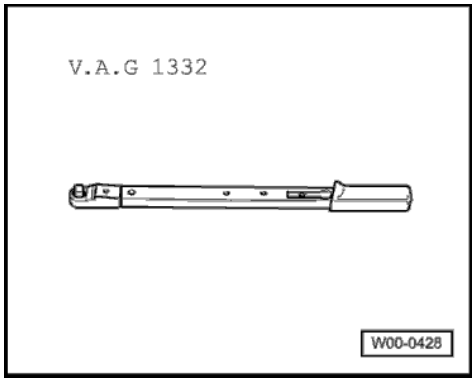

Removing:

- Disconnect earth strap at battery.

Protected by copyright. Copying for private or commercial purposes, in part or in whole, is not permitted unless authorised by Volkswagen AG. Volkswagen AG does not guarantee or accept any liability with respect to the correctness of information in this document. Copyright by Volkswagen AG.

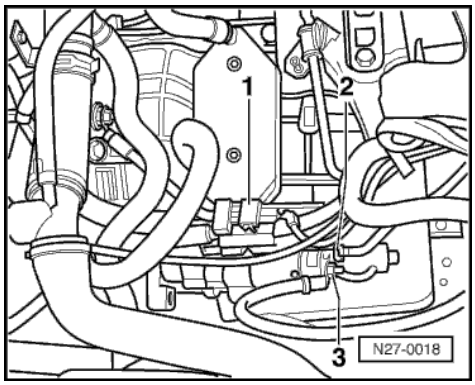

Note:

Before removing the starter on TDI engines, the cables/hoses must be removed from charge air cooler to suction pipe, to turbocharger and from cooler to cylinder head.

- Remove insulation tray.

=> General body repairs, exterior; Repair group 50; Body front; Assembly overview

◀ - Separate connection -1- and pull out from retainer.
- Release terminal 50 connector -2- and pull off.
- Remove terminal 30 wire -3- on solenoid.

- When installing tighten nut to 13 Nm.

- Remove wiring from wiring guides.
- Remove wiring guides.

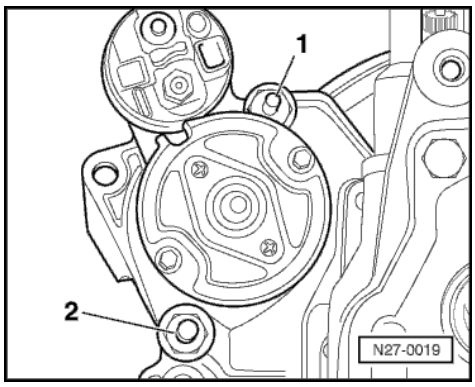

◀ - Remove upper hexagon bolt -1- (M12 x 180 mm).

- When installing tighten hexagon bolt to 65 Nm.

- Remove lower hexagon bolt -2- (M12 x 180 mm).

- When installing tighten hexagon bolt to 65 Nm.

- Take starter out downwards.

Installing

Install in reverse order

Removing and installing alternator with ribbed belt

Notes:

♦ Check alternator:

=> Current flow diagrams, Electrical fault finding and Fitting locations binder

♦ When the battery is reconnected, check operation of vehicle electrical equipment (radio, clock and electric windows etc.) according to Workshop Manual or Owner's Manual.

Warning!

Before working on the electrical system disconnect the battery earth strap.

Special tools, testers, measuring instruments and auxiliary items required

♦ V.A.G 1331 Torque wrench (5 - 50 Nm)

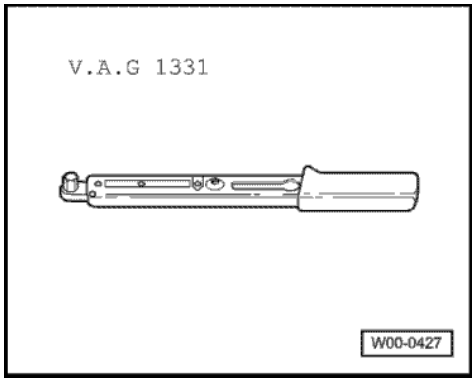

satelettronica
Protected by copyright. Copying for private or commercial purposes, in part or in whole, is not permitted unless authorised by Volkswagen AG. Volkswagen AG does not guarantee or accept any liability with respect to the correctness of information in this document. Copyright by Volkswagen AG.

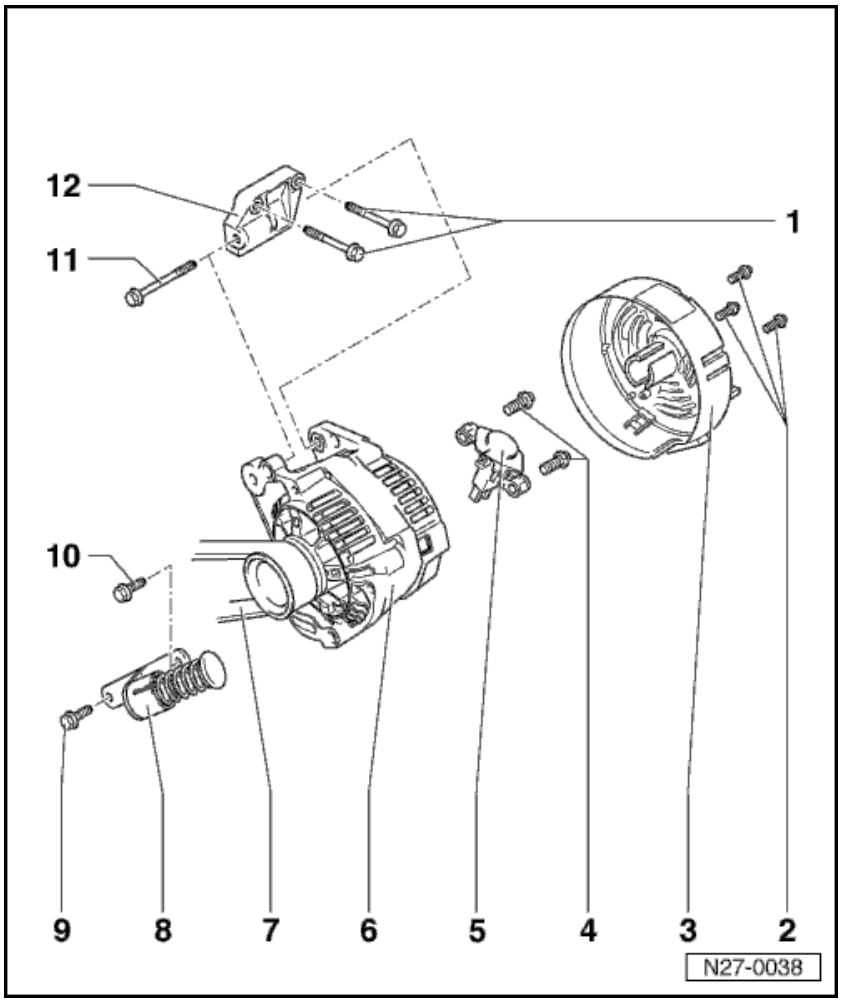

4 - cylinder fuel injection engine, 1.4 ltr. basic belt drive vehicles >04.99

1 - Hexagon bolts
- 55 Nm
- On aluminium block: M10x55 mm, Renew bolts (coated with sealant)
- On cast iron block: M10x50 mm

2 - Hexagon bolts
- M3 x 18mm

3 - End cap

4 - Cross-head screws
- M4 x 25mm

5 - Voltage regulator
- Checking carbon brushes => Page 27-79
- Removing and installing => Page 27-80

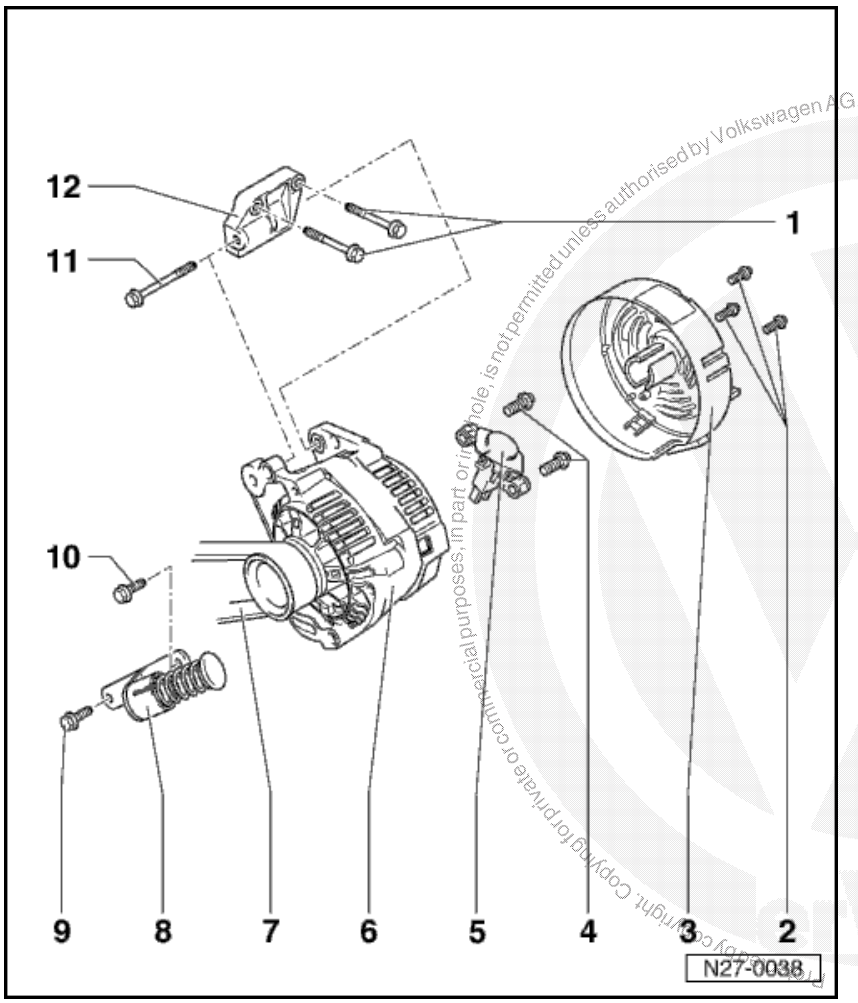

6 - Alternator
- Tightening torque of B+ => Page 27-78

7 - Ribbed belt
- Removing and installing => Page 27-72
- Ribbed belt drive => Page 27-74, Fig.1

8 - Tensioning arm
- Observe tightening sequence =>Page 27-73

9 - Hexagon bolt
- 25 Nm
- On aluminium block: M8x25 mm, Renew bolts (coated with sealant)
- On cast iron block: M8x22 mm

satelettronica
Volkswagen AG. Volkswagen AG does not guarantee or accept any liability with respect to the correctness of information in this document. Copyright by Volkswagen AG.
Reproduction, in part or in whole, is not permitted unless authorised by Volkswagen AG. Copyright. Copying for private or commercial purposes, in part or in whole, is not permitted unless authorised by Volkswagen AG. Copyright.

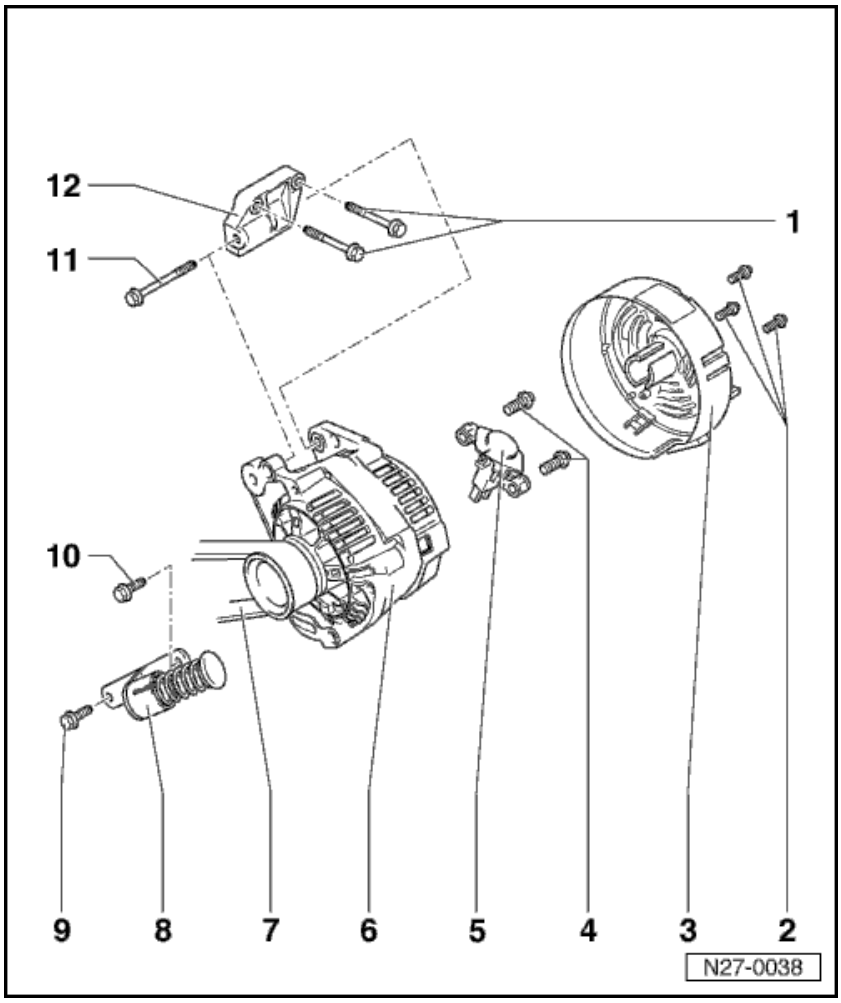

10 - Hexagon bolt
- M8 x 35mm
- 25 Nm

11 - Hexagon bolt
- M8 x 85 mm
- 25 Nm
- Observe tightening sequence =>Page 27-73

12 - Bracket

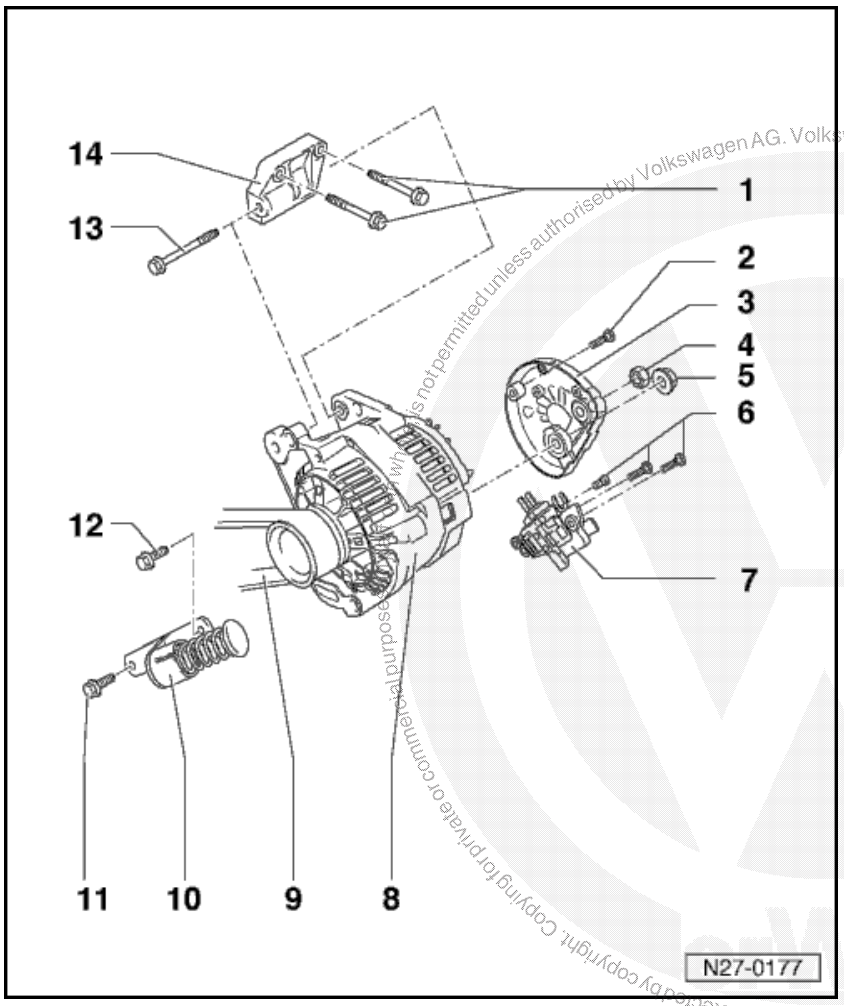

4 - cylinder fuel injection engine 1.4 ltr. with basic belt drive vehicles 05.99 >

1 - Hexagon bolts
- M10x50 mm
- 45 Nm
- On aluminium block: Renew bolts (coated with sealant)

2 - Cross-head screw

3 - Protective cap

4 - Hexagon nut
- M8

5 - Hexagon nut
- M8

6 - Cross-head screws

satelettronica

Protected by copyright. Copying for private or commercial purposes, in any form and by any means, is not permitted unless authorised by Volkswagen AG. Volkswagen AG does not guarantee or accept any liability with respect to the correctness of information in this document. Copyright by Volkswagen AG.

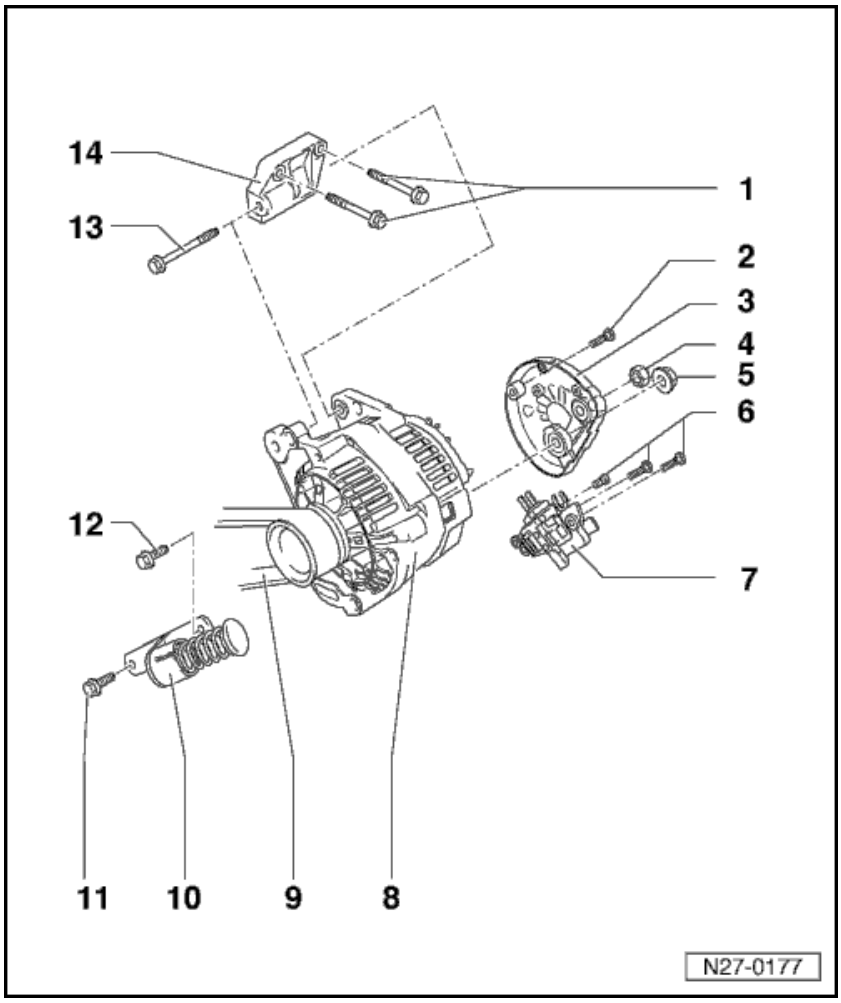

7 - Voltage regulator

- Checking carbon brushes => Page 27-82
- Removing and installing => Page 27-83

8 - Alternator

- Tightening torque of B+ wire => Page 27-81

9 - Ribbed belt

- Removing and installing => Page 27-72
- Ribbed belt drive => Page 27-74, Fig.1

10 - Tensioning arm

- Observe tightening sequence =>Page 27-73

11 - Hexagon bolt

- M8 x 22 mm
- 25 Nm
- On aluminium block: Renew bolts (coated with sealant)

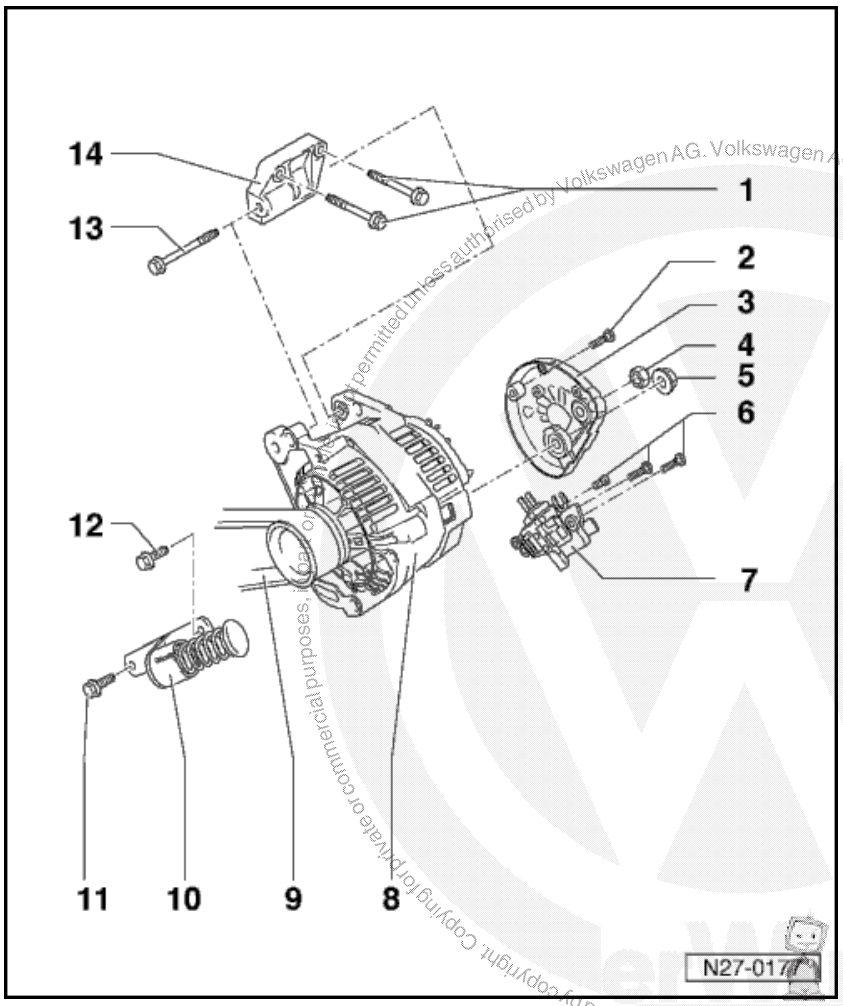

12 - Hexagon bolt

- M8 x 39mm
- 25 Nm

13 - Hexagon bolt

- M8 x 85 mm
- 25 Nm
- Observe tightening sequence =>Page 27-73

14 - Bracket

satelettronica
Protected by copyright. Copying for private or commercial purposes, in part, is not permitted unless authorised by Volkswagen AG. Volkswagen AG does not guarantee or accept any liability with respect to the correctness of information in this document. Copyright by Volkswagen AG.

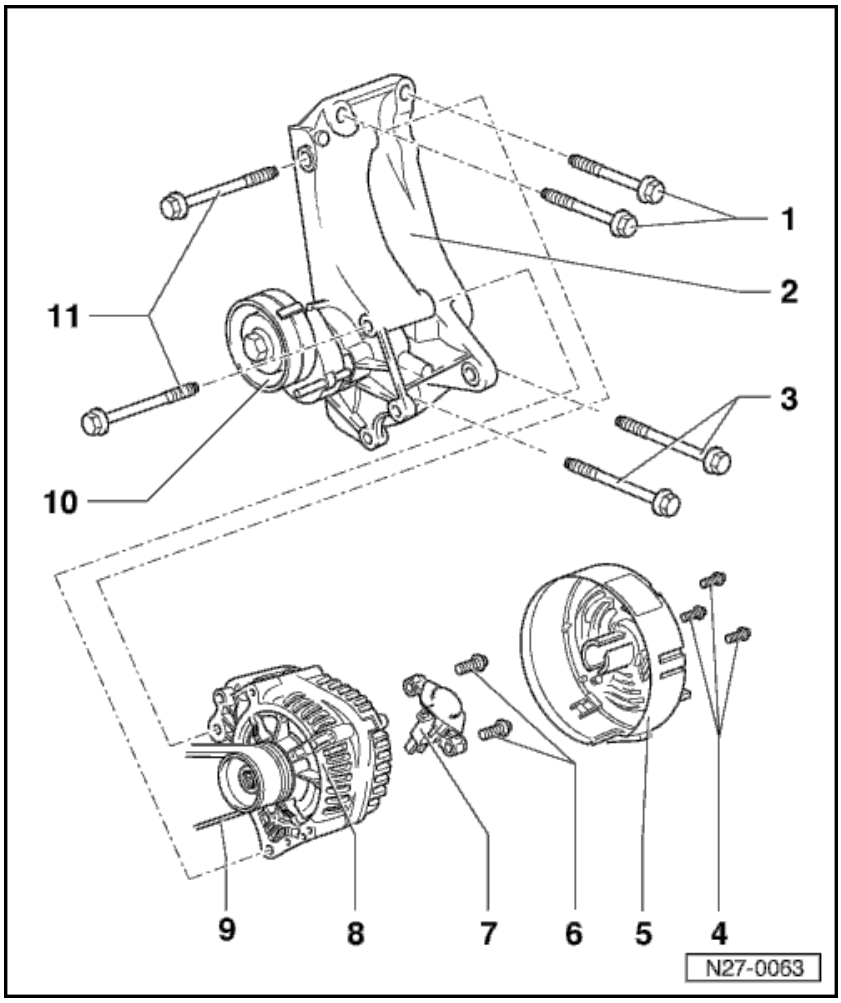

4 - cylinder fuel injection engine 1.4 ltr. with power-as-sisted steering vehicles >04.99

1 - Hexagon bolts

- 55Nm
- On aluminium block: M10x55 mm, Renew bolts (coated with sealant)
- On cast iron block: M10x50 mm
- Tightening sequence:
  Upper right bolt first (item 1), then lower right bolt (item 3), and upper and lower bolts on left last (as seen locking forwards)

2 - Bracket

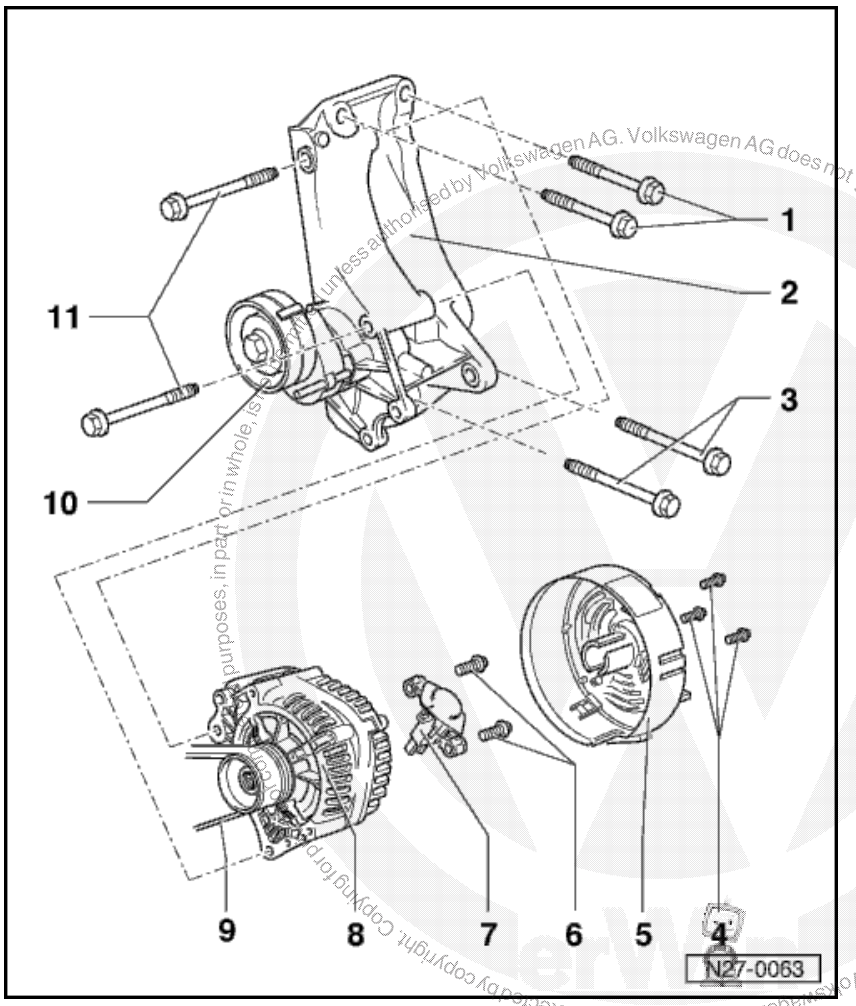

3 - Hexagon bolts

- On aluminium block:
  M10x100 mm, Renew bolts (coated with sealant)
- On cast iron block:
  M10x95 mm
- Tightening sequence:
  Upper right bolt first (item 1), then lower right bolt (item 3), and upper and lower bolts on left last (as seen locking forwards)

4 - Hexagon bolts

- M3 x 18mm

5 - Protective cap

6 - Cross-head screws

- M4 x 25mm

7 - Voltage regulator

- Checking carbon brushes => Page 27-79
- Removing and installing => Page 27-80

Protected by copyright. Copying for private or commercial purposes, in part or in whole, is not permitted unless authorised by Volkswagen AG. Volkswagen AG does not guarantee or accept any liability with respect to the correctness of information in this document. Copyright by Volkswagen AG.

satelettronica

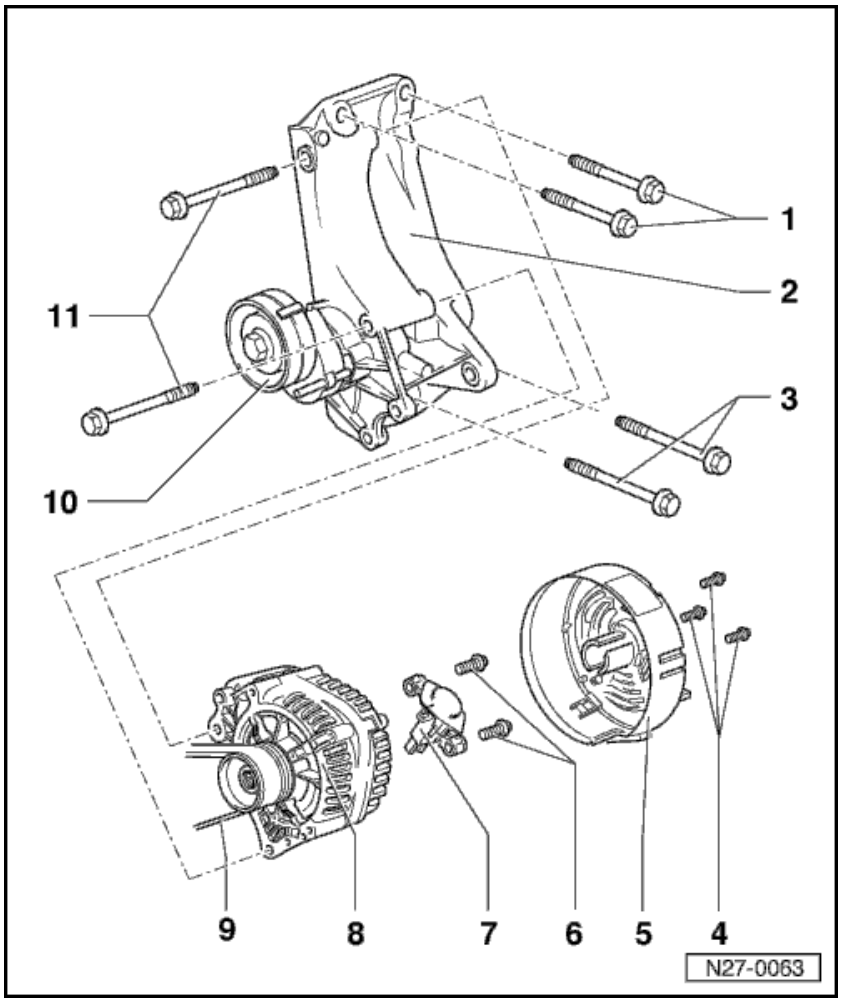

8 - Alternator

- Tightening torque of B+ => Page 27-78

9 - Ribbed belt

- Removing and installing => Page 27-74
- Ribbed belt drive => Page 27-74, Fig.2

10 - Tensioning roller

11 - Hexagon bolts

- M8 x 85mm
- 25 Nm

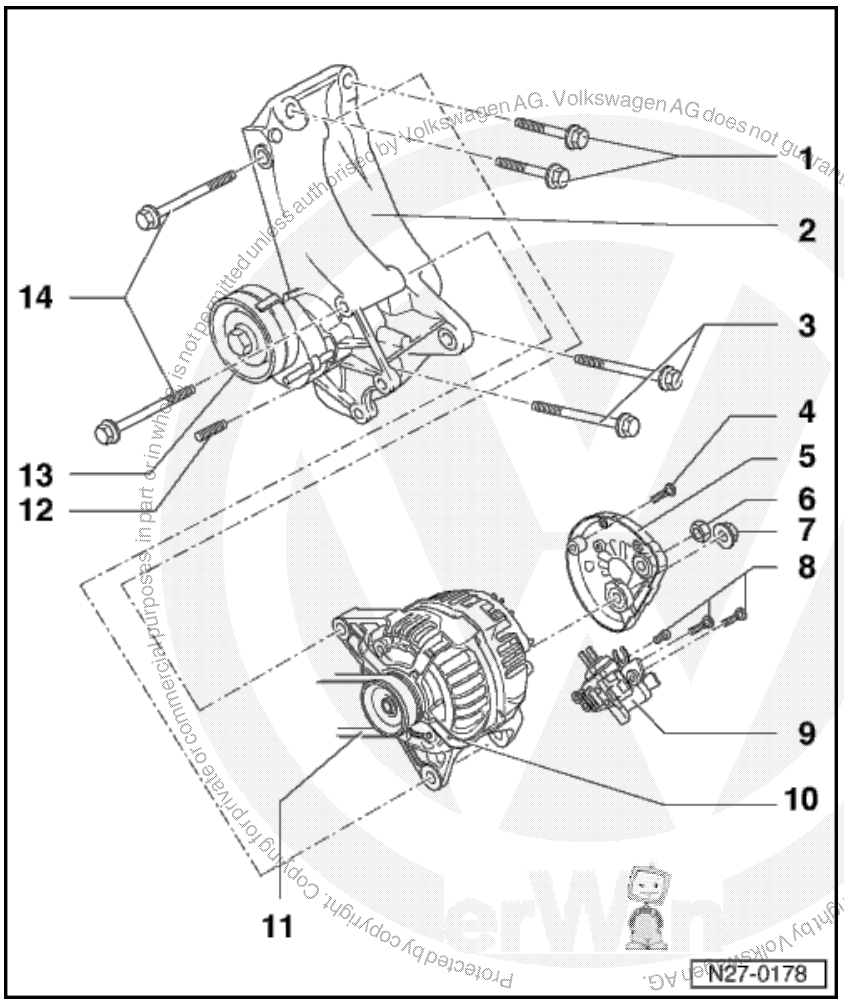

4 - cylinder fuel injection engine 1.4 ltr. with power-as-sisted steering, vehicles 05.99 >

1 - Hexagon bolts

- M10 x 55mm
- 50 Nm
- On aluminium block: Renew bolts (coated with sealant)
- Tightening sequence: Upper right bolt first (item 1), then lower right bolt (item 3), and upper and lower bolts on left last (as seen locking forwards)

2 - Bracket

Protected by copyright. Copying for private or commercial purposes, in part or in whole, is not permitted unless authorised by Volkswagen AG. Volkswagen AG does not guarantee or accept any liability with respect to the correctness of information in this document. Copyright by Volkswagen AG.

satelettronica

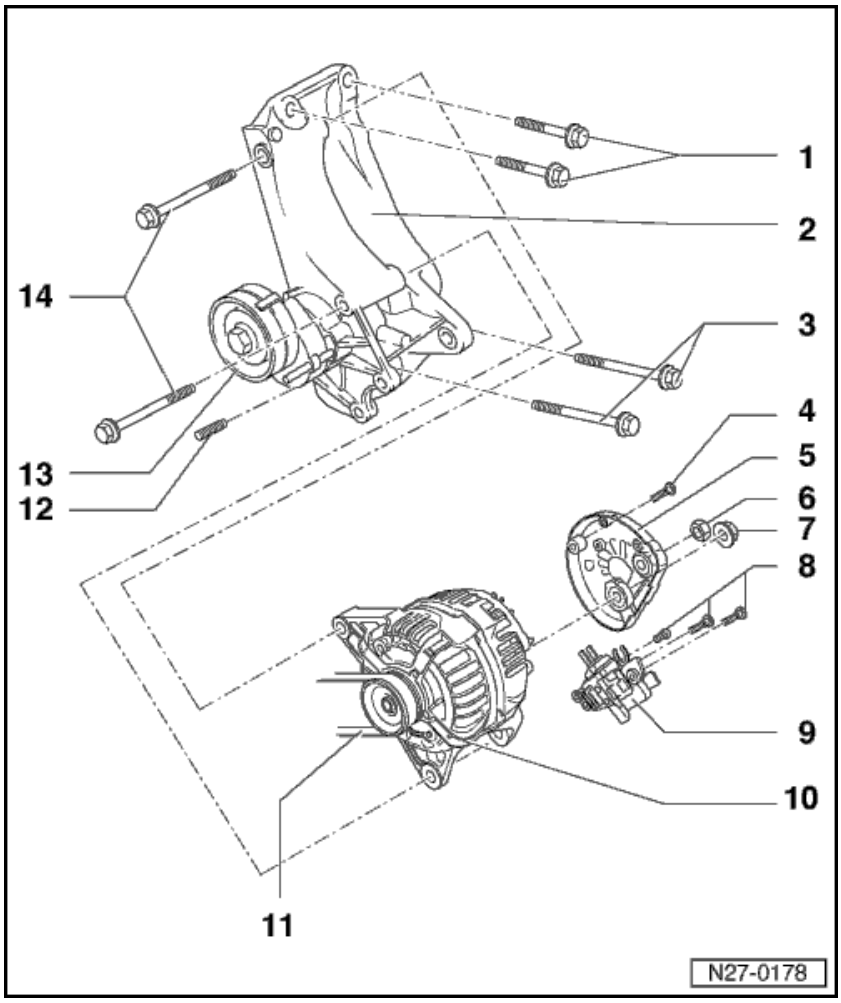

3 - Hexagon bolts
- M10 x 100mm
- 50 Nm
- On aluminium block: Renew bolts (coated with sealant)
- Tightening sequence:
  Upper right bolt first (item 1), then lower right bolt (item 3), and upper and lower bolts on left last (as seen locking forwards)

4 - Cross-head screws

5 - Protective cap

6 - Hexagon nut
- M8

7 - Hexagon nut
- M8

satelettronica

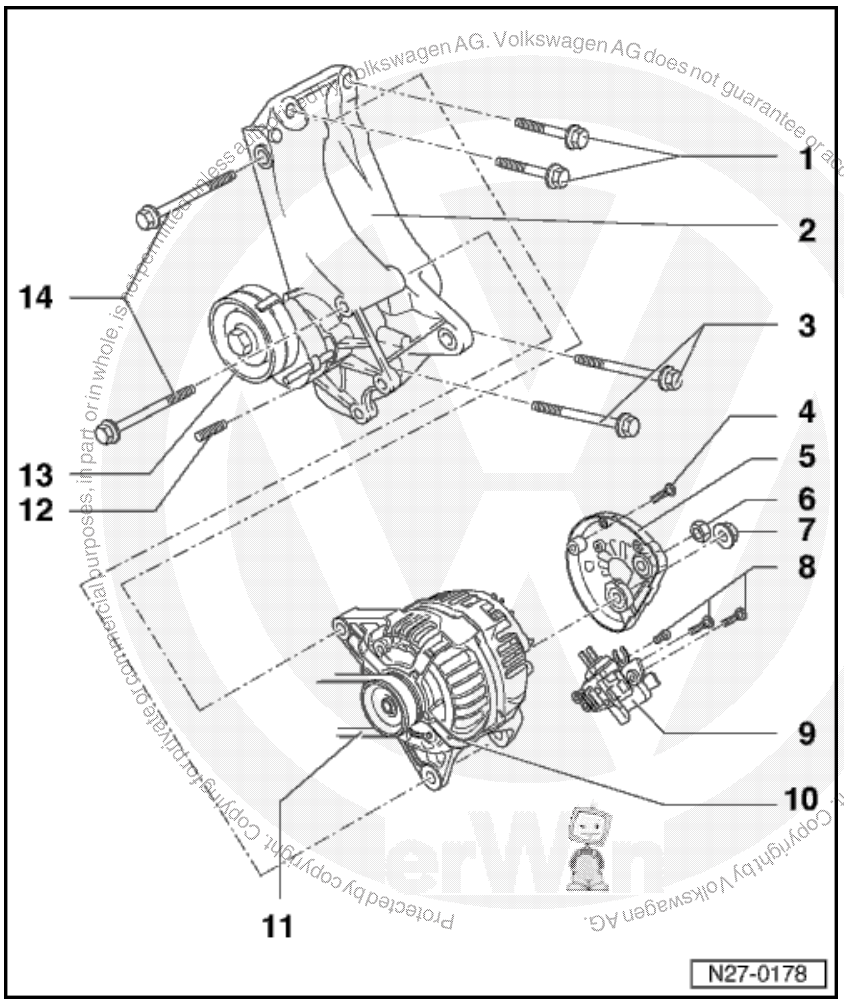

Protected by copyright. Copyright by Volkswagen AG. Volkswagen AG does not guarantee or accept any liability with respect to the correctness of information in this document. Copyright by Volkswagen AG.

8 - Cross-head screws

9 - Voltage regulator
- Checking carbon brushes => Page 27-82
- Removing and installing => Page 27-83

10 - Alternator
- Tightening torque of B+ wire => Page 27-81

11 - Ribbed belt
- Removing and installing => Page 27-74
- Ribbed belt drive => Page 27-74, Fig.2

12 - M8 sealing screw with hexagonal recess

13 - Tensioning roller

14 - Hexagon bolts
- M8 x 85 mm
- 25 Nm

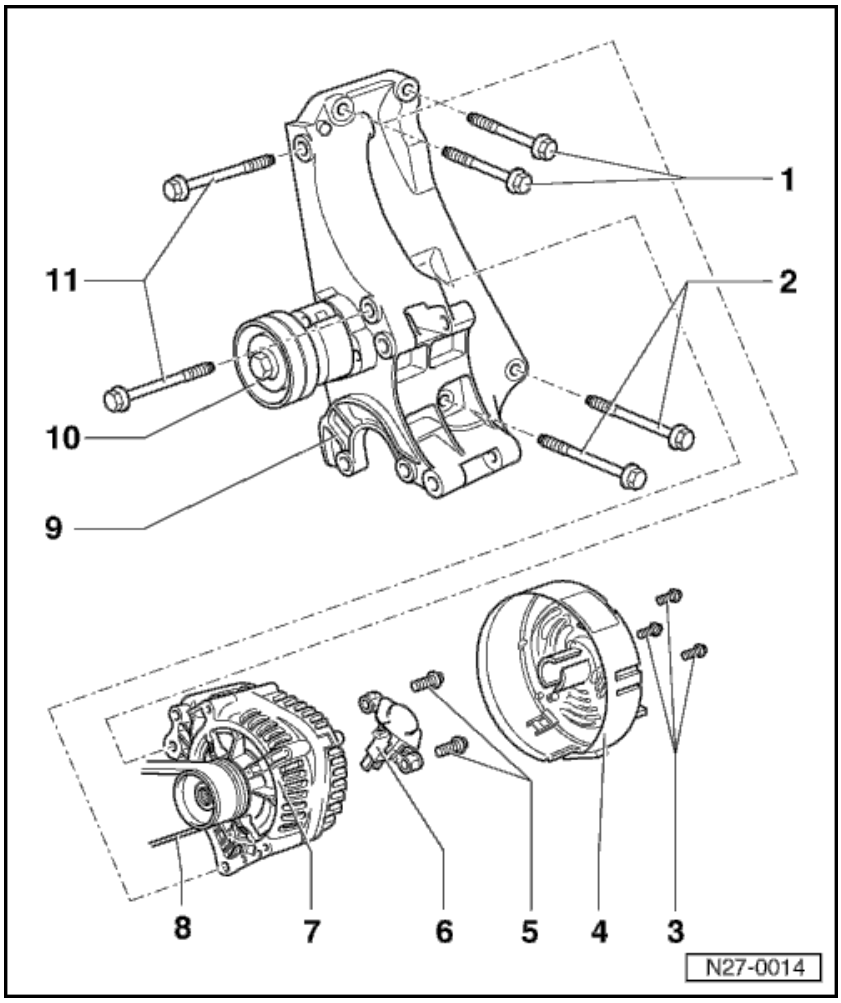

4 - cylinder fuel injection engine 1.4 ltr. with air conditioner compressor and power-assisted steering >04.99

1 - Hexagon bolts

- 55 Nm
- On aluminium block: M10x55 mm, Renew bolts (coated with sealant)
- On cast iron block: M10x50 mm
- Tightening sequence:
  Upper right bolt first (item 1), then lower right bolt (item 3), and upper and lower bolts on left last (as seen locking forwards)

satelettronica

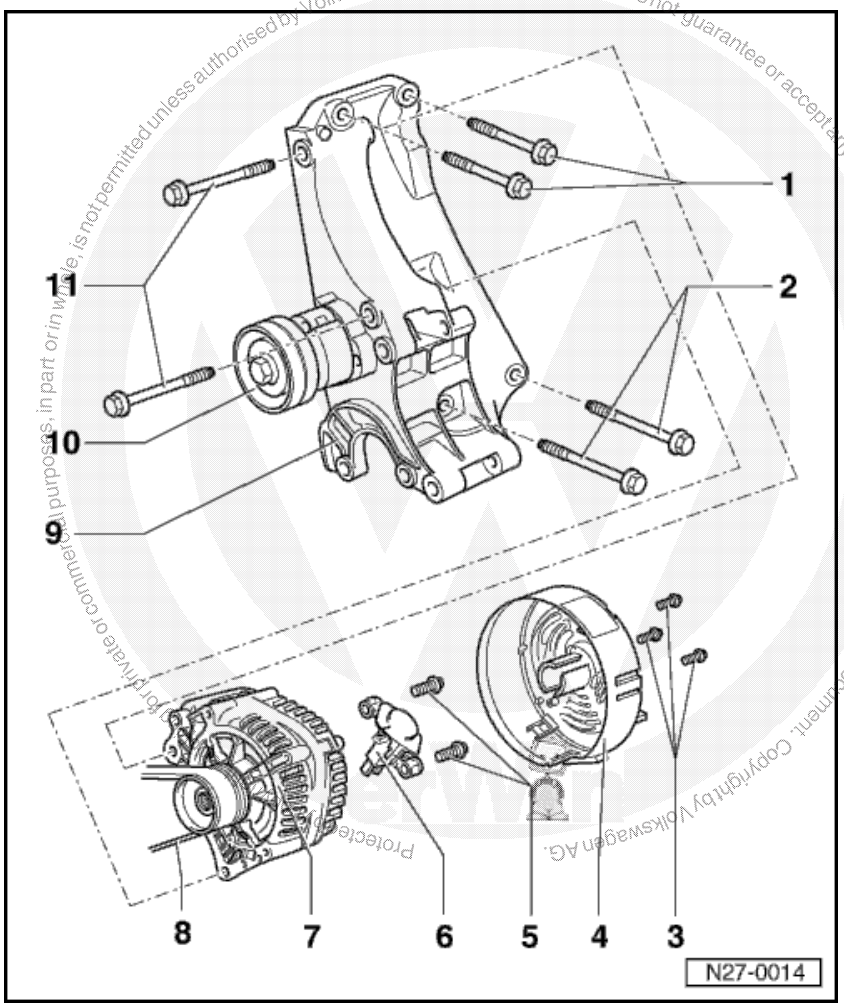

Protected by Volkswagen AG. Volkswagen AG does not guarantee or accept any liability with respect to the correctness of information in this document. Copyright by Volkswagen AG. For private or commercial purposes, in part or in whole, is not permitted unless authorised by Volkswagen AG.

2 - Hexagon bolts

- On aluminium block: M10x100mm, Renew bolts (coated with sealant)
- On cast iron block: M10x95 mm
- Tightening sequence:
  Upper right bolt first (item 1), then lower right bolt (item 3), and upper and lower bolts on left last (as seen locking forwards)

3 - Hexagon bolts

- M3 x 18mm

4 - Protective cap

5 - Cross-head screws

- M4 x 25mm

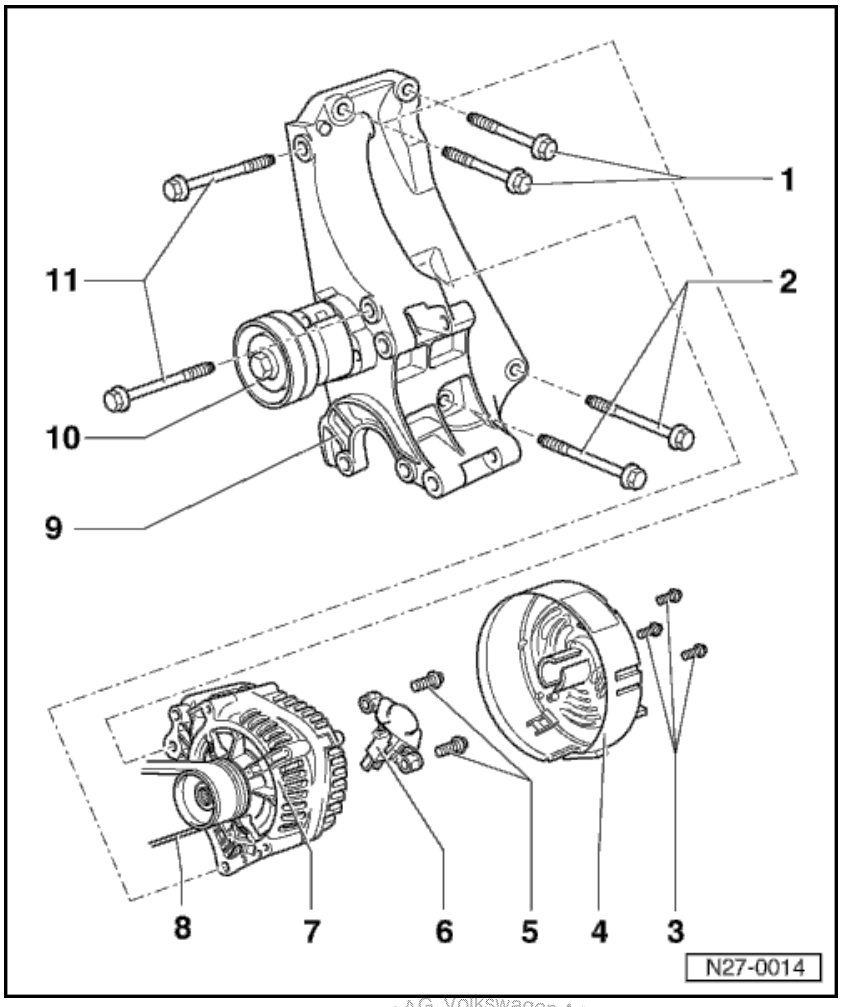

6 - Voltage regulator

- Checking carbon brushes => Page 27-79
- Removing and installing => Page 27-80

7 - Alternator

- Tightening torque of B+ => Page 27-78

8 - Ribbed belt

- Removing and installing => Page 27-74
- Ribbed belt drive => Page 27-75, Fig. 3

9 - Bracket

10 - Tensioning roller

11 - Hexagon bolts

- M8 x 85 mm
- 25 Nm

satelettronica

Copyright by Volkswagen AG. Volkswagen AG does not guarantee or accept any liability with respect to the correctness of information in this document. Copying for private or commercial purposes, in part or in whole, is not permitted unless authorised by Volkswagen AG.

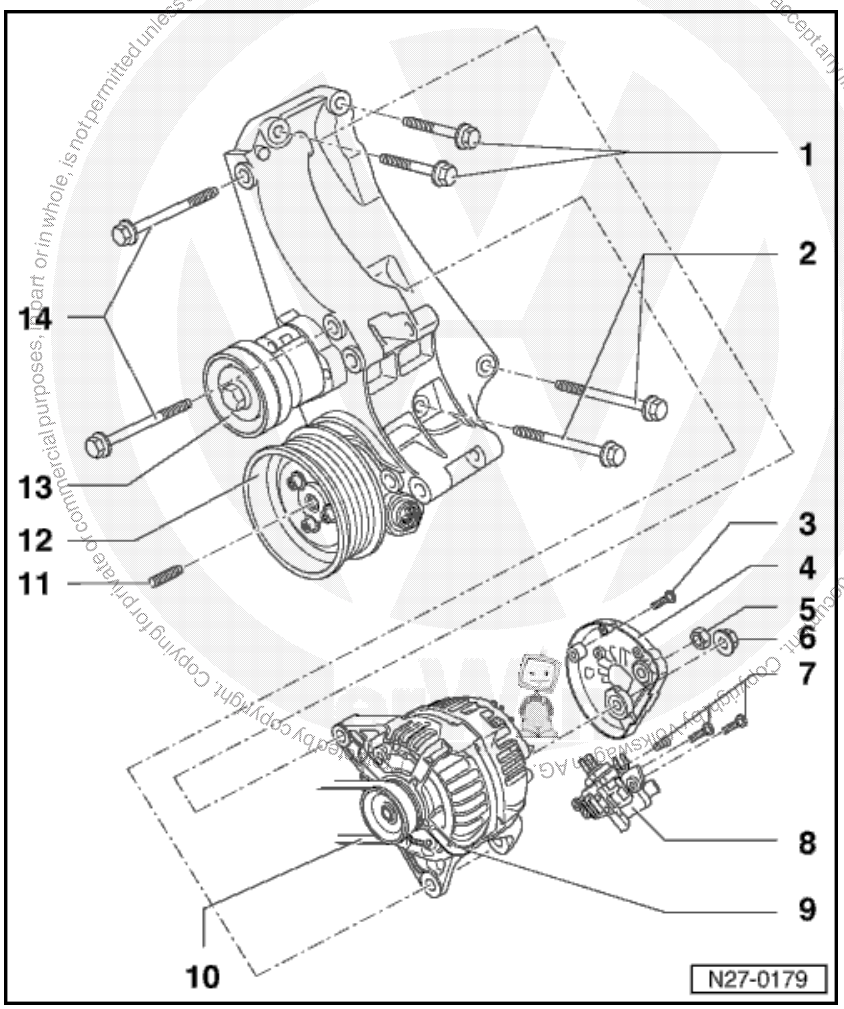

4 - cylinder fuel injection engine 1.4 ltr. with power-as-sisted steering and air conditioner compressor vehicles 05.99 >

1 - Hexagon bolts

- M10x50 mm
- 45 Nm
- On aluminium block: Renew bolts (coated with sealant)
- Tightening sequence: Upper right bolt first (item 1), then lower right bolt (item 3), and upper and lower bolts on left last (as seen locking forwards)

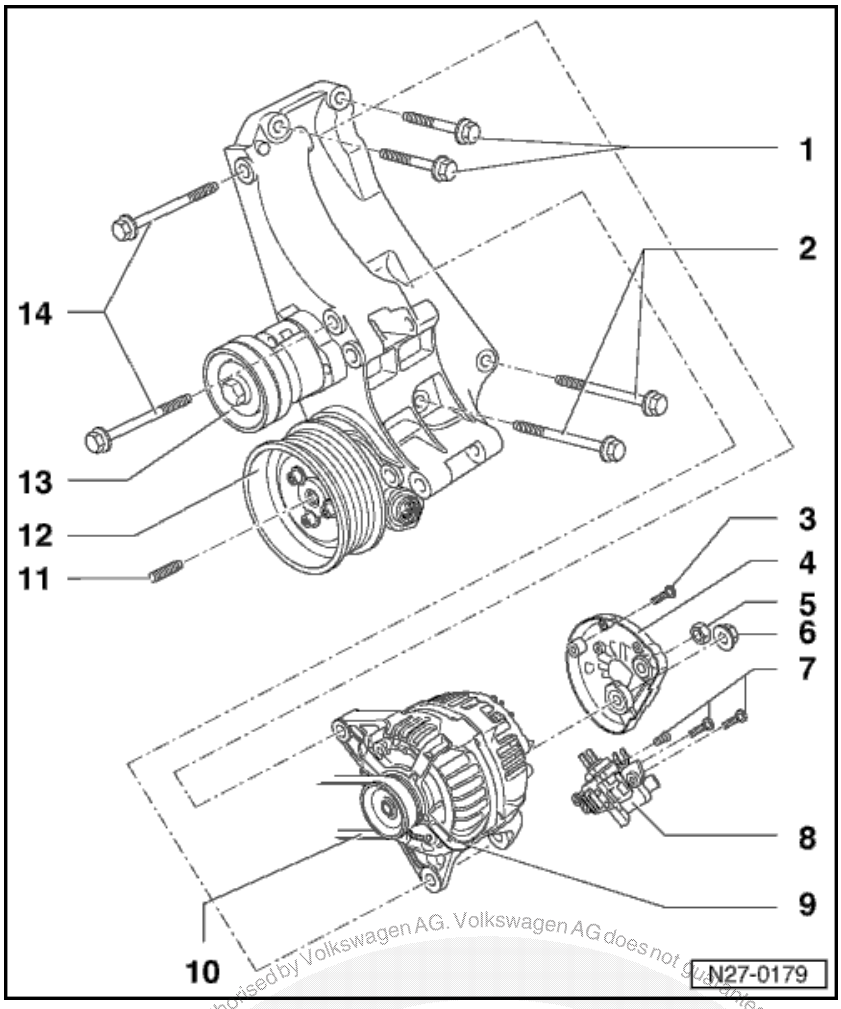

2 - Hexagon bolts

- M10x95 mm
- 45 Nm
- On aluminium block: Renew bolts (coated with sealant)
- Tightening sequence:
  Upper right bolt first (item 1), then lower right bolt (item 2), and upper and lower bolts on left last (as seen locking forwards)

3 - Cross-head screw

4 - Protective cap

5 - Hexagon nut

- M8

6 - Hexagon nut

- M8

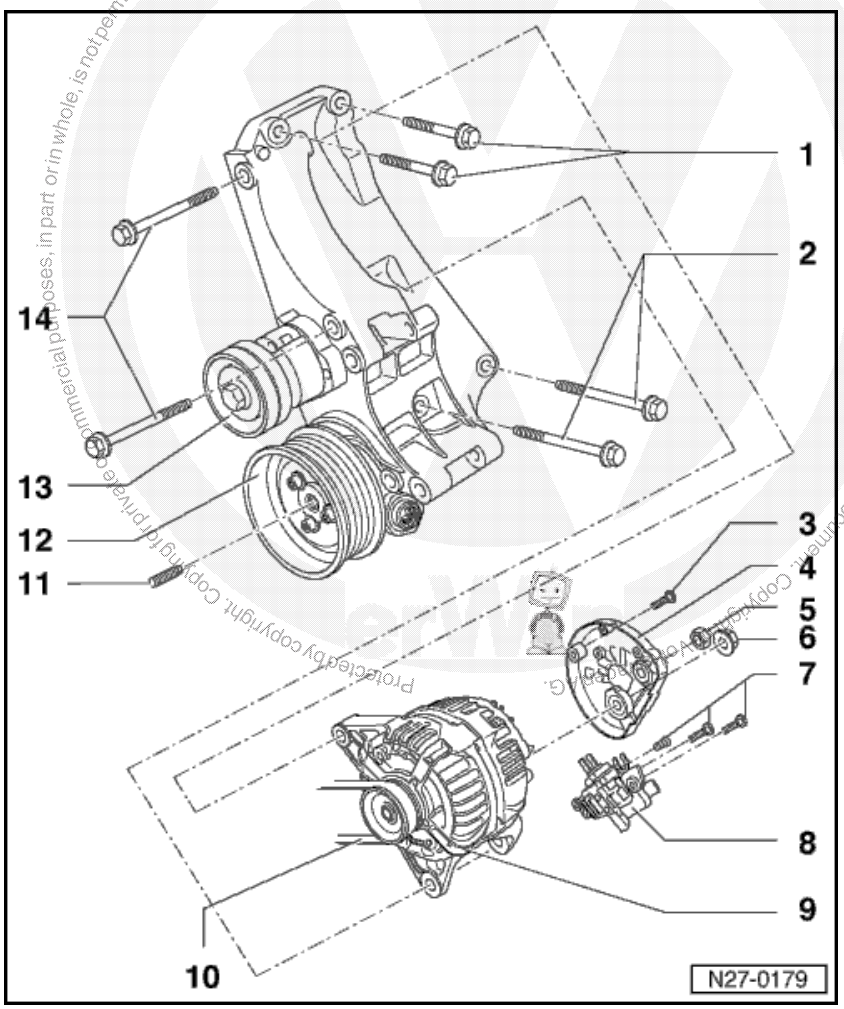

7 - Cross-head screw

8 - Voltage regulator

- Checking carbon brushes => Page 27-82
- Removing and installing => Page 27-83

9 - Alternator

- Tightening torque of B+ wire => Page 27-81

10 - Ribbed belt

- Removing and installing => Page 27-74
- Ribbed belt drive => Page 27-75, Fig. 3

11 - M8 sealing screw with hexagonal recess

Protected by copyright. Copying for private or commercial purposes, in part or in whole, is not permitted unless authorised by Volkswagen AG. Volkswagen AG does not guarantee or accept any liability with respect to the correctness of information in this document. Copyright by Volkswagen AG.
satelettronica

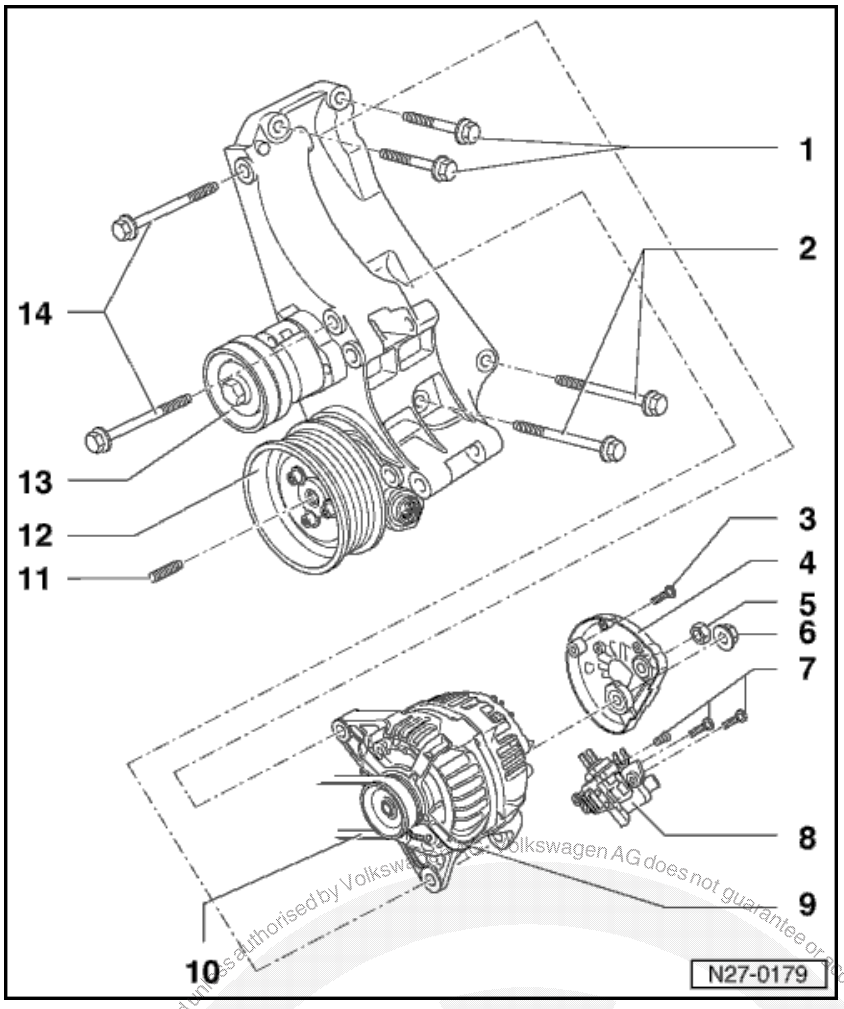

12 - Bracket

13 - Tensioning roller

14 - Hexagon bolts
- ♦ M8 x 85 mm
- ♦ 25 Nm

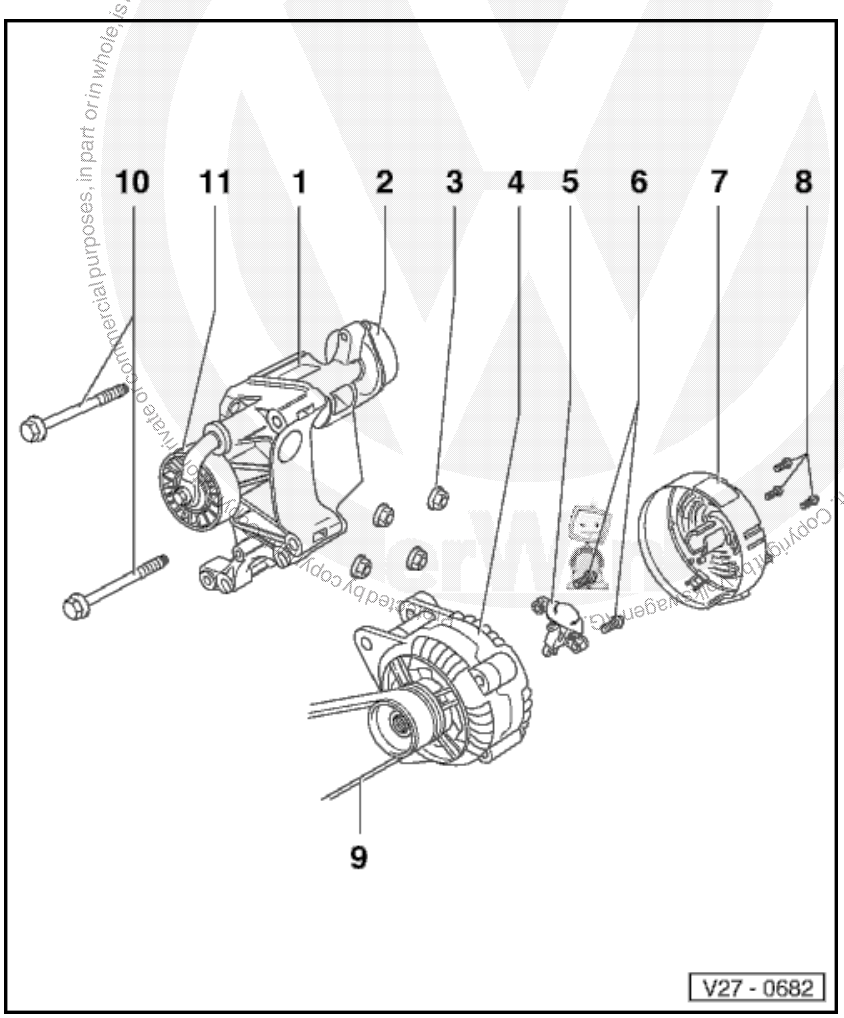

4 - cylinder fuel injection engine 1.6 ltr. and 1.8 ltr. vehicles > 04.99

1 - Bracket

2 - Tensioning element for tensioning roller

3 - Hexagon nuts
- ♦ M8
- ♦ 30 Nm

4 - Alternator
- ♦ Tightening torque of B+ => Page 27-78

5 - Voltage regulator
- ♦ Checking carbon brushes => Page 27-79
- ♦ Removing and installing => Page 27-80

6 - Cross-head screws
- ♦ M4 x 25mm

satelettronica

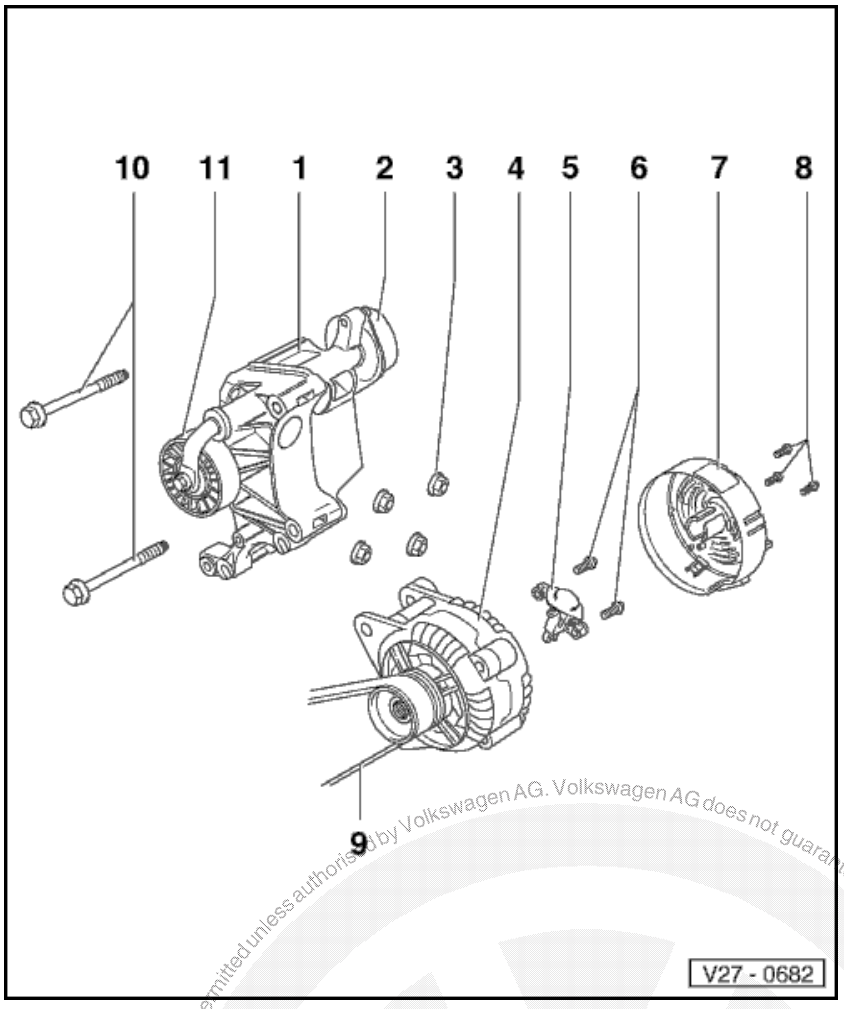

7 - End cap

8 - Cross-head screws

9 - Ribbed belt
- Removing and installing => Page 27-76
- Ribbed belt drive => Page 27-75, Figs.4 and 5

10 - Hexagon bolts
- M8 x 85 mm
- 25 Nm

11 - Tensioning roller

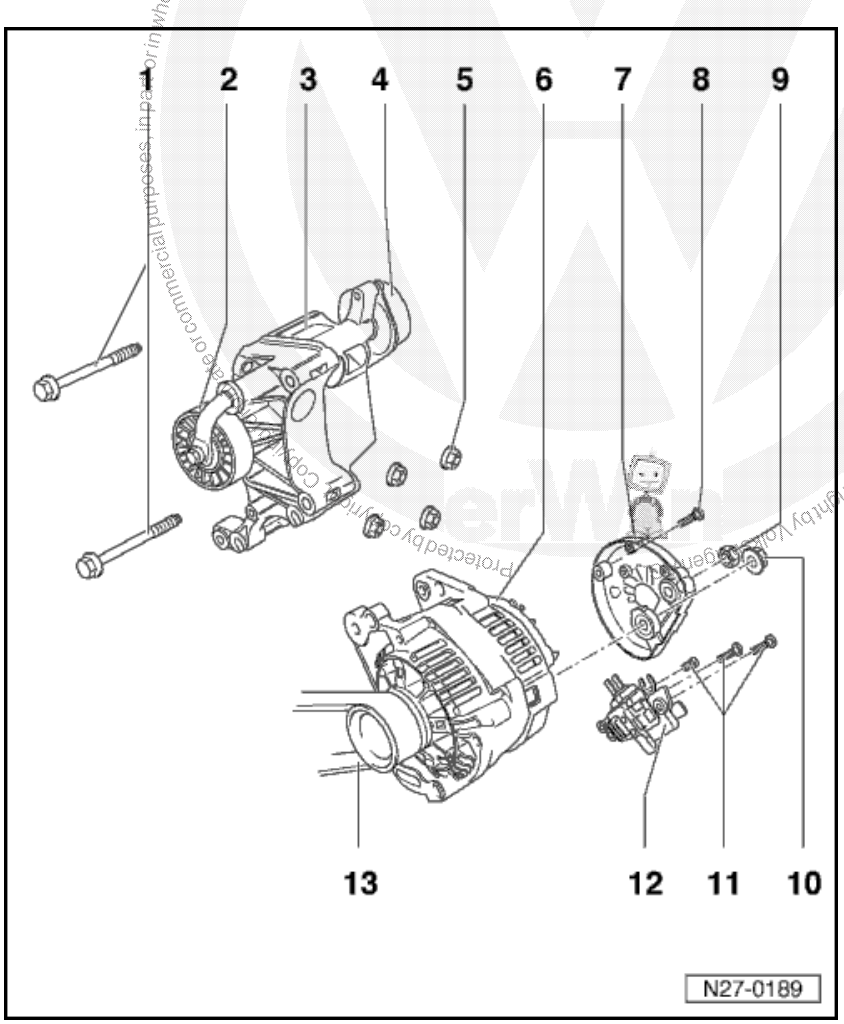

4 - cylinder fuel injection engine 1.6 ltr. and 1.8 ltr. vehicles 05.99 >

1 - Hexagon bolts
- M8 x 85 mm
- 25 Nm

2 - Tensioning roller

3 - Bracket

4 - Tensioning element for tensioning roller

5 - Hexagon nuts
- M8
- 30 Nm

6 - Alternator
- Tightening torque of B+ wire => Page 27-81

7 - Protective cap

satelettronica

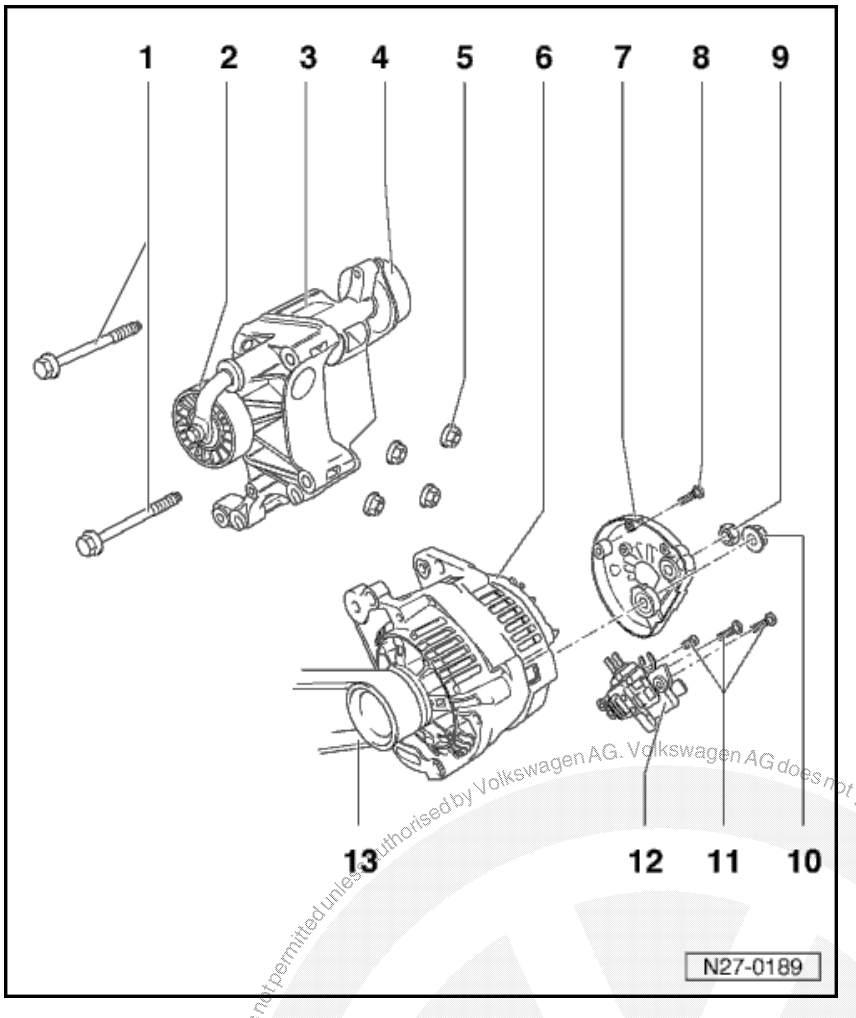

8 - Cross-head screws

9 - Hexagon nut
- M8

10 - Hexagon nut
- M8

11 - Cross-head screws

12 - Voltage regulator
- Checking carbon brushes => Page 27-82
- Removing and installing => Page 27-83

13 - Ribbed belt
- Removing and installing => Page 27-76
- Ribbed belt drives =>Page 27-75, Figs. 4 and 5

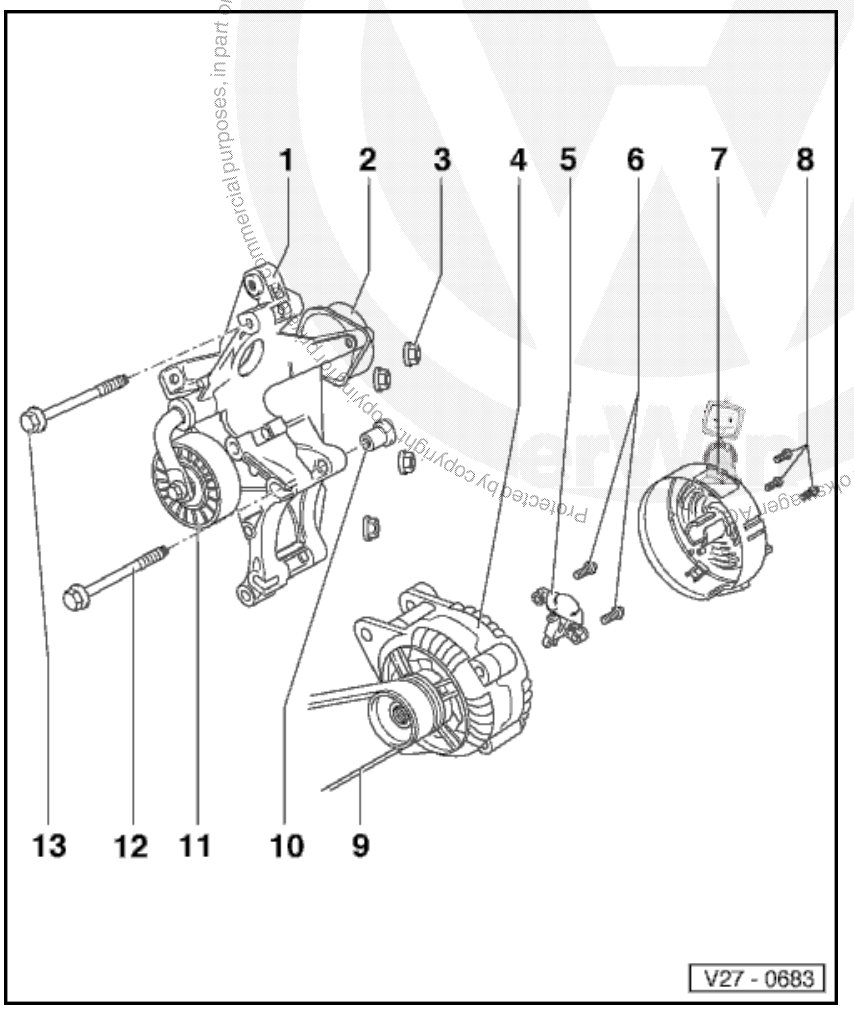

Diesel engine vehicles >04.99

1 - Bracket

2 - Tensioning element for tensioning roller

3 - Hexagon nuts
- M8
- 30 Nm

4 - Alternator
- Tightening torque of B+ => Page 27-78

5 - Voltage regulator
- Checking carbon brushes => Page 27-79
- Removing and installing => Page 27-80

6 - Cross-head screws
- M4 x 25mm

satelettronica

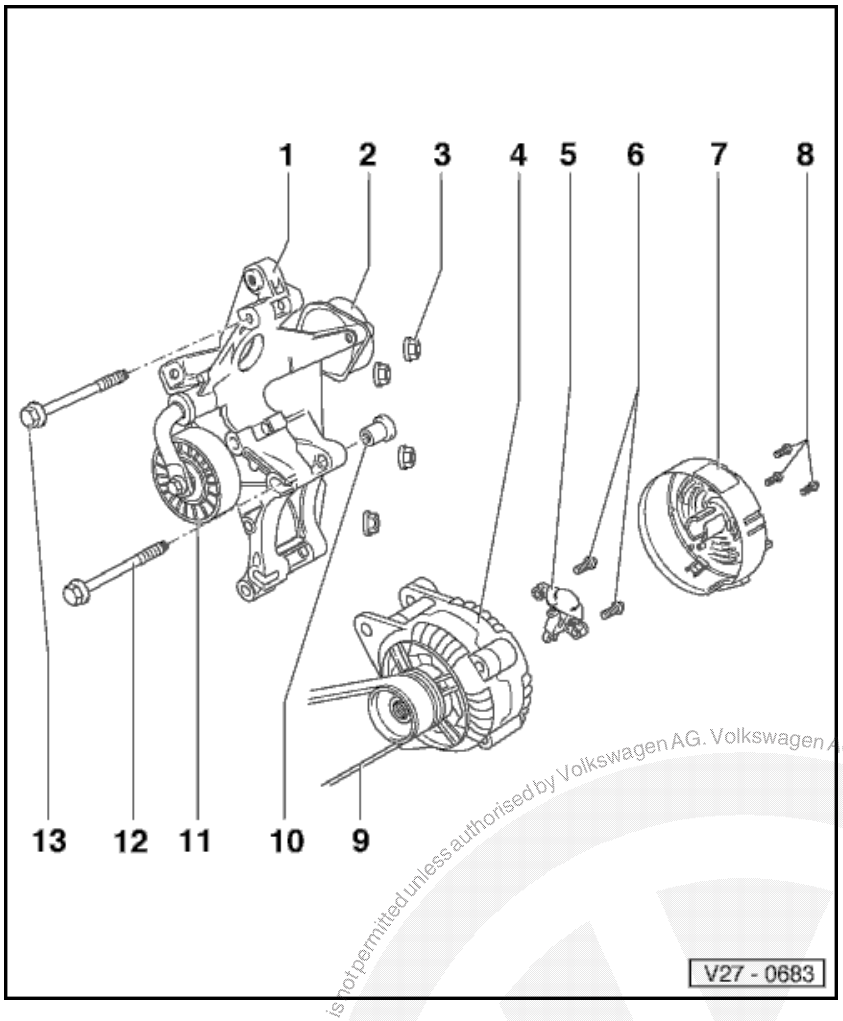

7 - End cap

8 - Cross-head screws

9 - Ribbed belt
- Removing and installing => Page 27-76
- Ribbed belt drives => Page 27-75, Figs.4 und 5

10 - Internally threaded sleeve
- M8

11 - Tensioning roller

12 - Hexagon bolt
- M8 x 85 mm
- 25 Nm

13 - Hexagon bolt
- 25 Nm

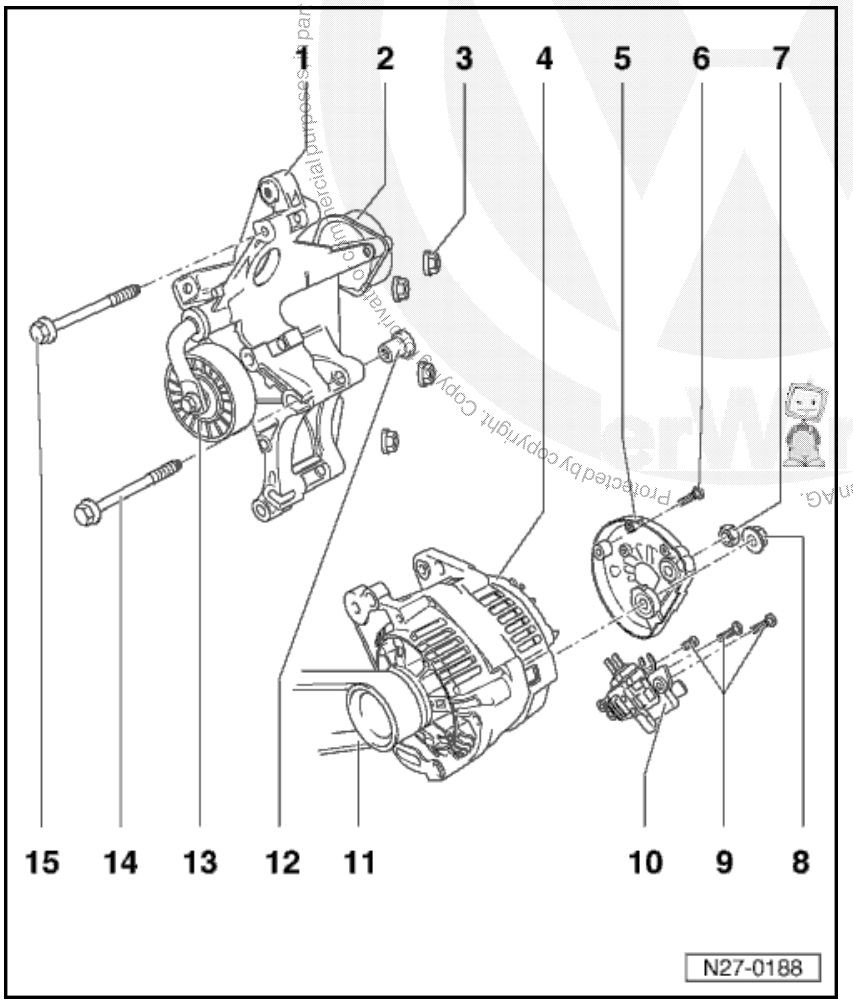

Diesel engine vehicles 05.99 >

1 - Bracket

2 - Tensioning element for tensioning roller

3 - Hexagon nuts
- M8
- 30 Nm

4 - Alternator
- Tightening torque of B+ wire => Page 27-81

5 - End cap

6 - Cross-head screws

7 - Hexagon nut
- M8

8 - Hexagon nut
- M8

satelettronica

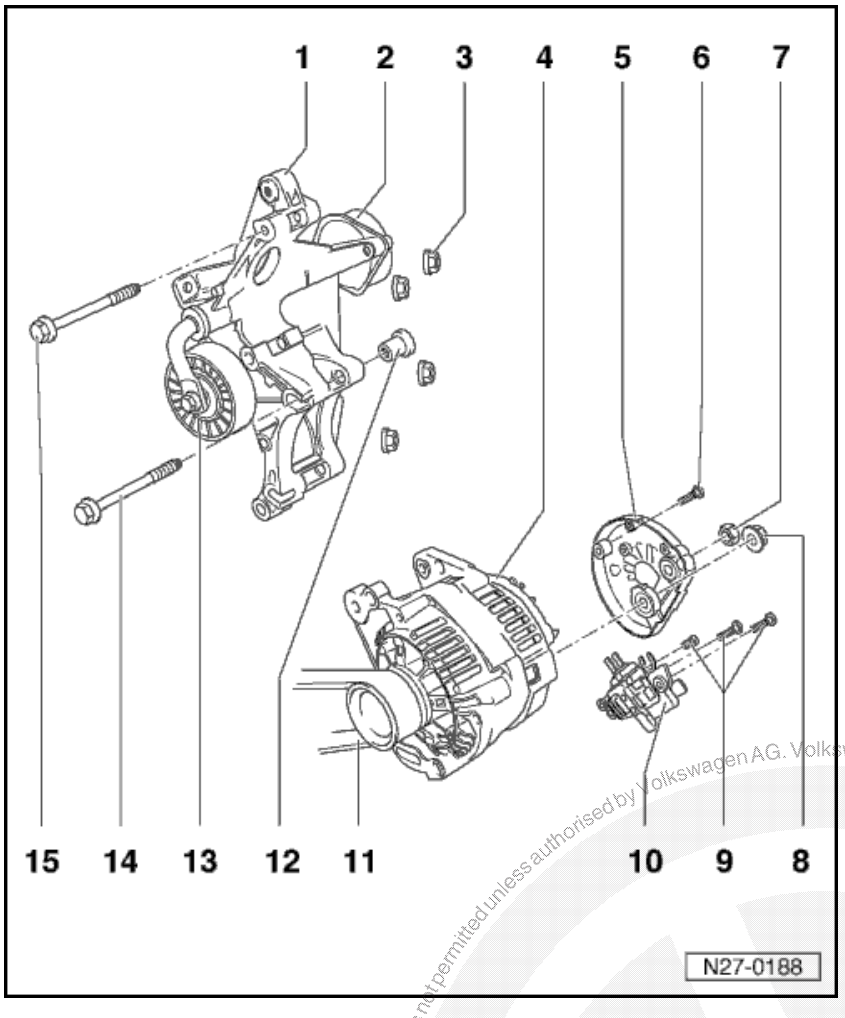

9 - Cross-head screws

10 - Voltage regulator
- Checking carbon brushes => Page 27-82
- Removing and installing => Page 27-83

11 - Ribbed belt
- Removing and installing => Page 27-76
- Ribbed belt drives => Page 27-75, Fig.4 and 5

12 - Internally threaded sleeve
- M8

13 - Tensioning roller

14 - Hexagon bolt
- M8 x 85 mm
- 25 Nm

15 - Hexagon bolt
- 25 Nm

Copyright. Copying for private or commercial purposes, in part or in whole, is not permitted unless authorised by Volkswagen AG. Volkswagen AG does not guarantee or accept any liability with respect to the correctness of information in this document. Copyright by Volkswagen AG.

satelettronica

Ribbed belt drive

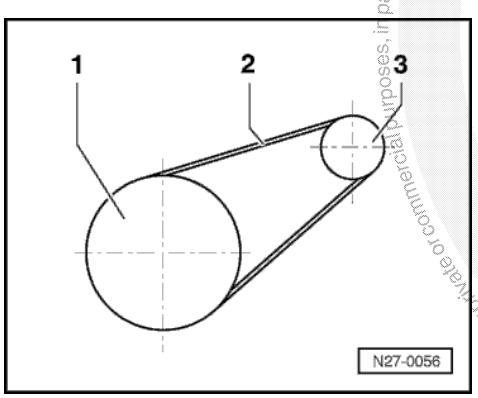

Fig.1 4 - cylinder fuel injection engine 1.4 ltr. with basic belt drive

- 1 -Crankshaft/vibration damper/pulley
- 2 -Ribbed belt - Crankshaft/vibration damper and alternator
- 3 -Pulley - Alternator

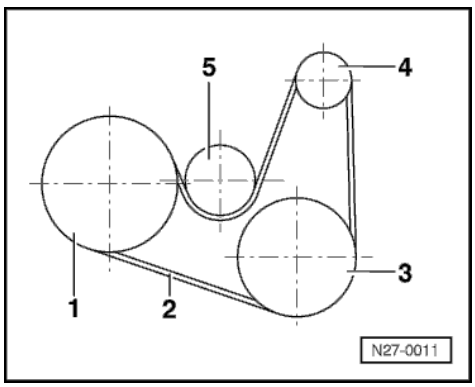

Fig. 2 4 - cylinder fuel injection engine 1.4 ltr. with power-assisted steering vane pump

- 1 -Crankshaft/vibration damper/pulley
- 2 -Ribbed belt - Crankshaft/vibration damper, tensioning roller, alternator and power steering vane pump
- 3 -Pulley - P.A.S. vane pump
- 4 -Pulley - Alternator
- 5 -Tensioner

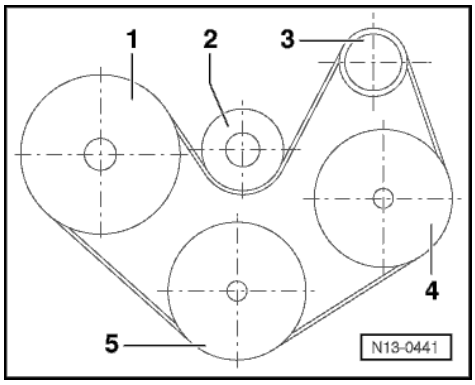

Fig.3 4-cylinder fuel injection engine with P.A.S vane pump and air conditioner compressor

- 1 -Crankshaft/vibration damper/pulley
- 2 -Tensioning roller
- 3 -Pulley - Alternator
- 4 -Pulley - Air conditioner compressor
- 5 -Pulley - P.A.S. vane pump

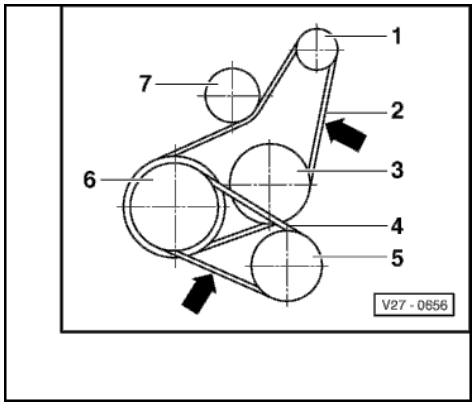

Fig. 4 4-cylinder fuel injection engine 1.6 ltr. and 1.8 ltr. and diesel engine with P.A.S vane pump

- 1 -Pulley - alternator
- 2 -Ribbed belt - alternator, coolant pump, crankshaft and tensioning roller
- 3 -Pulley - Coolant pump
- 4 -Ribbed belt - crankshaft and P.A.S vane pump
- 5 -Pulley - P.A.S vane pump
- 6 -Crankshaft/vibration damper/pulley
- 7 -Tensioner

satelettronica

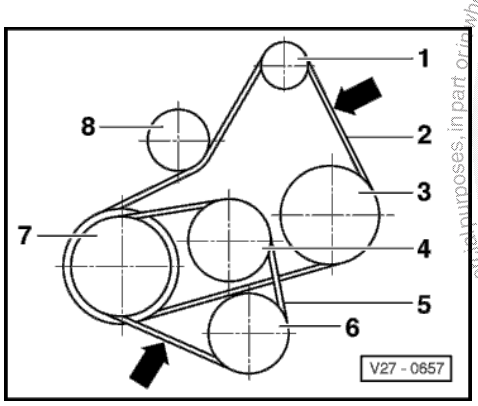

Fig. 5 4-cylinder fuel injection engine 1.6 ltr. and 1.8 ltr. and diesel engine with P.A.S vane pump and air conditioner compressor

- 1 -Pulley - alternator
- 2 -Ribbed belt - alternator, crankshaft, air conditioner compressor and tensioning roller
- 3 -Pulley - air conditioner compressor
- 4 -Pulley - coolant pump
- 5 -Ribbed belt - crankshaft, P.A.S vane pump and coolant pump
- 6 -Pulley - P.A.S. vane pump
- 7 -Pulley - crankshaft
- 8 -Tensioning roller

Checking V-belt

- Check for:
  - Sub-surface cracks (cracks, core ruptures, cross sectional breaks)
  - Layer separation (top layer, draw strands)
  - Base break-up
  - Fraying of draw strands
  - Flank wear (material wear, frayed flanks, flank hardening (glassy flanks), surface cracks)
  - Traces of oil and grease

Notes:

♦ Before removing the V-belt mark direction of rotation. When installing, ensure correct direction of rotation. Installing opposite to the direction of rotation leads to belt damage!

Copyright by Volkswagen AG. Volkswagen AG does not guarantee or accept any liability with respect to the correctness of information in this document. Copying for private or commercial purposes, in part or in whole, is not permitted unless authorised by Volkswagen AG.

- If damage is established, replace V-belt immediately to prevent failure or functional faults!

Checking ribbed belt

Note:

It is essential to renew the ribbed belt if a fault is found. This will avoid possible break-downs or operating problems.

- Crank engine by hand and check ribbed ribbed belt for:
  - Sub-surface cracks (cracks, core ruptures, cross sectional breaks)
  - Layer separation (top layer, cord strands)
  - Base break-up
  - Fraying of cord strands
  - Flank wear (material wear, frayed flanks, flank brittleness -glassy flanks-, surface cracks)

Protected by copyright. Copyright by Volkswagen AG. Volkswagen AG does not guarantee or accept any liability with respect to the correctness of information in this document. Copyright by Volkswagen AG. Reproduction or commercial purposes, in part or in whole, is not permitted unless authorised by Volkswagen AG.

Removing and installing ribbed belt

Note:

- If a used ribbed belt is to be reused, mark direction of rotation before removing. When installing used ribbed belts observe the direction of rotation marked on removal. Installing opposite to the direction of rotation leads to belt damage!
- It is not necessary to adjust the ribbed belt tension, as a spring loaded tensioner guarantees the best possible belt tension.

4-cylinder fuel injection engine 1.4 ltr. with basic belt drive

Special tools, testers, measuring instruments and auxiliary items required

- V.A.G 1331 Torque wrench (5 - 50 Nm)

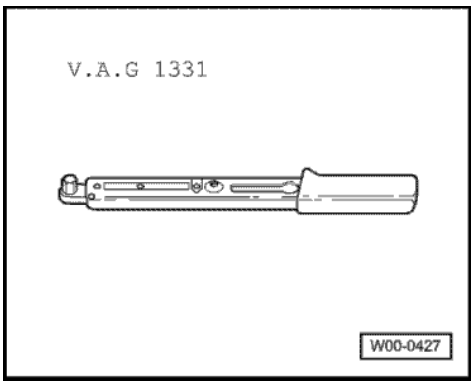

satelettronica

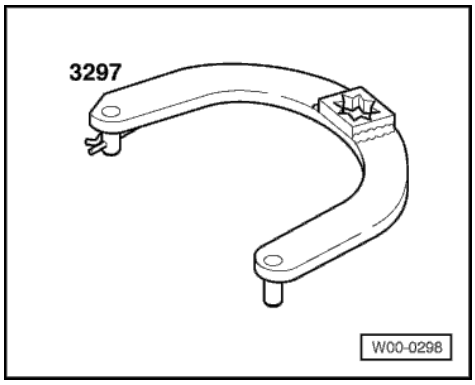

♦ 3297 Tensioning lever

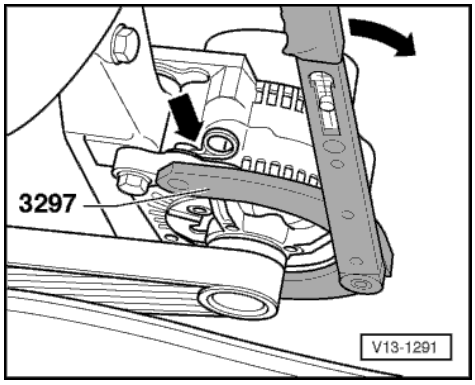

Removing ribbed belt

- Mark direction of rotation of ribbed belt if it is to be reused.
- Loosen alternator securing bolts at least one turn.
- Install tensioning lever 3297, secure with spring pin -arrow- and swivel alternator down (e.g. use torque wrench V.A.G 1331 to turn 3297).
- Remove ribbed belt.

Installing ribbed belt

Note:

♦ When installing used ribbed belts observe the direction of rotation marked on removal!
♦ When fitting the belt ensure the ribbed belt locates correctly in the pulleys!

- Fit ribbed belt to all belt pulleys. Alternator belt pulley remains free.

- Lower alternator with lever 3297 and place ribbed belt on alternator pulley.
- Push alternator down at least 3 times onto stop with tensioning lever 3297 to ensure the alternator moves freely.
- After fitting ribbed belt with alternator loose rotate engine several times (approx. 10 revolutions of engine), to do this operate starter briefly, but do not start engine.

Note:

When tightening keep to the sequence given, do not use the alternator for support and do not touch ribbed belt.

- Tighten alternator lower securing bolt first and then upper securing bolt to 25 Nm.
- Start engine and check belt running.

4 - cylinder fuel injection engine 1.4 ltr. with power-assisted steering and air conditioner compressor

Removing ribbed belt

- Remove ribbed belt cover.

Protected by copyright. Copying for commercial purposes, in part or in whole, is not permitted unless authorised by Volkswagen AG. Volkswagen AG does not guarantee or accept any liability with respect to the correctness of information in this document. Copyright by Volkswagen AG.
satelettronica

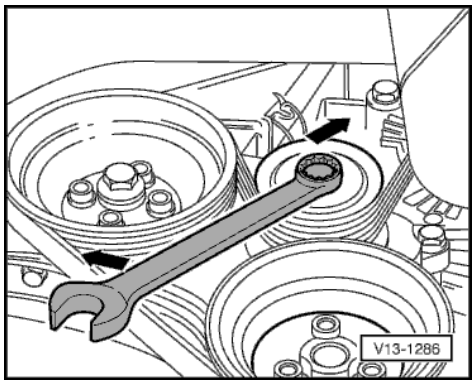

- Mark direction of rotation of ribbed belt if it is to be reused.
- Using a spanner on the securing bolt swivel tensioning roller in direction of arrow.
- Remove ribbed belt.

Installing ribbed belt

Notes:

- ♦ When fitting used ribbed belts observe the direction of rotation marked on removal!
- ♦ Ensure, before installing ribbed belt, that all ancillaries (alternator, air conditioner compressor, power assisted steering vane pump) are secured tightly.
- ♦ When fitting the belt ensure the ribbed belt locates correctly in the pulleys!

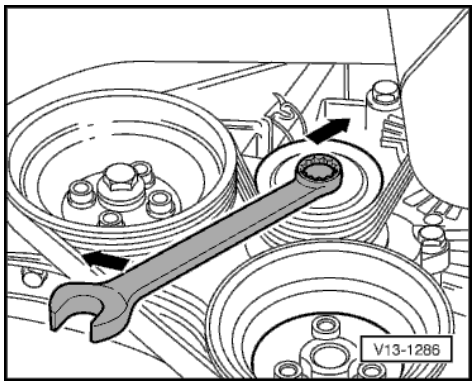

- Using a spanner on the securing bolt swivel tensioning roller in direction of arrow.
- Place ribbed belt onto crankshaft/vibration damper pulley first. Fit belt onto tensioning roller last.
- Start engine and check belt running.

1.6 ltr. and 1.8 ltr. fuel injection engine and diesel engine

Special tools, testers, measuring instruments and auxiliary items required

- ♦ 3299 Lever

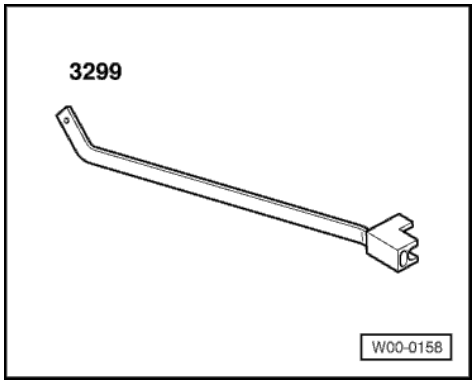

Removing ribbed belt

- Mark direction of rotation of ribbed belt if it is to be reused.
- Lift tensioner with lever 3299 and remove ribbed belt from the alternator pulley.
- Removing P.A.S. vane pump V-belt:

=> Running gear; Repair group 48; Assembly overview: hydraulic pipes, reservoir.

- Remove ribbed belt.

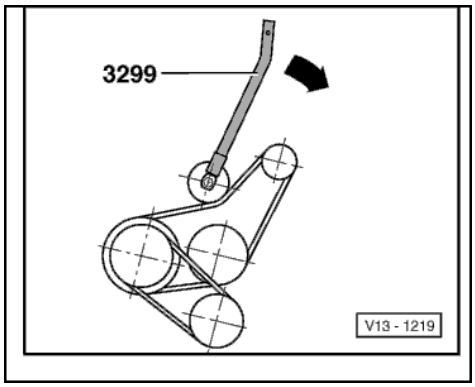

Installing ribbed belt

Notes:

- ♦ When fitting used ribbed belts observe the direction of rotation marked on removal!

Protected by copyright. Copying for private or commercial purposes, in part or in whole, is not permitted unless authorised by Volkswagen AG. Volkswagen AG does not guarantee or accept any liability with respect to the correctness of information in this document. Copyright by Volkswagen AG.
satelettronica

- When fitting the belt ensure the ribbed belt locates correctly in the pulleys!

Belt drive without air conditioner compressor

- Fit ribbed belt to crankshaft pulley/vibration damper and coolant pump pulley.

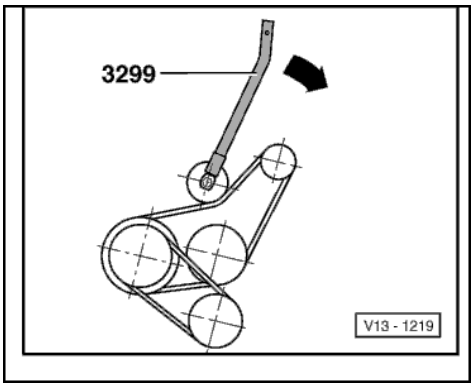

- Lift tensioning roller with lever 3299 and place ribbed belt on alternator pulley.
- Lower tensioning roller onto ribbed belt with lever 3299.
- Install P.A.S. vane pump V-belt:

=> Running gear; Repair group 48; Assembly overview: hydraulic pipes, reservoir.

- Start engine and check belt running.

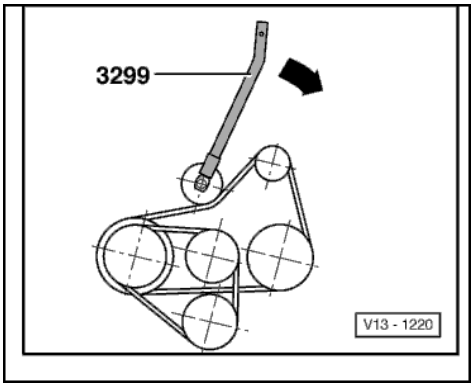

Belt drive with air conditioner compressor

- Fit ribbed belt to crankshaft pulley/vibration damper and compressor pulley.
- Lift tensioning roller with lever 3299 and place ribbed belt on alternator pulley.
- Lower tensioning roller onto ribbed belt with lever 3299.
- Install coolant pump and P.A.S. vane pump V-belt:

=> Running gear; Repair group 48; Assembly overview: hydraulic pipes, reservoir.

- Start engine and check belt running.

Compact alternator with ribbed belt drive, vehicles >04.99

Securing B+ wire to alternator

Notes:

If the B+ wire is not secured to the prescribed tightening torque the following may occur:

- Battery not charged completely.
- Vehicle electrics/electronics fail completely (breakdown).
- Danger of fires from sparks.
- Damage to electronic components and control units due to excessive voltages.

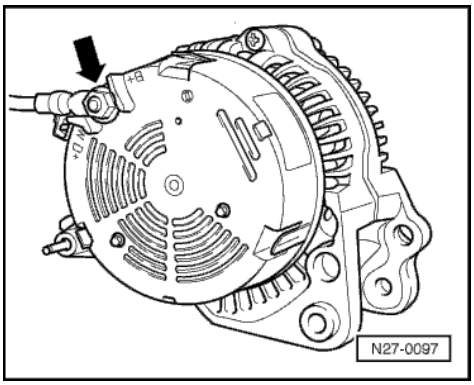

The tightening torque for the B+ wire -arrow- securing nut is 15 Nm.

satelettronica
Protected by copyright. Copying for private or commercial purposes, in part or in whole, is not permitted unless authorised by Volkswagen AG. Volkswagen AG does not guarantee or accept any liability with respect to the correctness of information in this document. Copyright by Volkswagen AG.

Checking alternator carbon brushes, vehicles >04.99

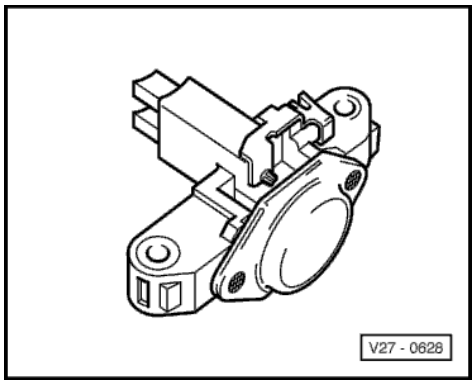

◀ Length of new carbon brushes = 12mm

Wear limit = 5mm

Carbon brush tolerance to one another = 1mm

Removing and installing voltage regulator for alternator, vehicles > 04.99

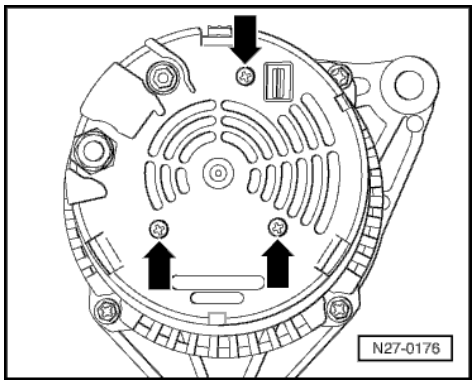

◀ - Remove screws -arrows- securing protective cap and pull protective cap off.
- Remove screws securing voltage regulator and take voltage regulator out.

Installation is carried out in the reverse sequence.

satelettronica
Protected by copyright. Copying for private or commercial purposes, in part or in whole, is not permitted unless authorised by Volkswagen AG. Volkswagen AG does not guarantee or accept any liability with respect to the correctness of information in this document. Copyright by Volkswagen AG.

Compact alternator with ribbed belt drive, vehicles 05.99 >

From 05.99 compact alternators with a revised form and terminal designation were introduced.

External means of identifying the new compact alternator as opposed to the compact alternators are:

- Revised voltage regulator
- Oval radially sealed connection for the 2-pin connector instead of the angular 2-pin connection used previously
- Revised terminal designations for the connections

=> Current flow diagrams, Electrical fault finding and Fitting locations

Securing B+ wire to alternator

Notes:

The threaded connection for the + wire on the compact alternator is designated B1+!

If the B1+ wire is not secured with the prescribed tightening torque the following may occur:

- Battery not charged completely.
- Vehicle electrics/electronics fail completely (breakdown).

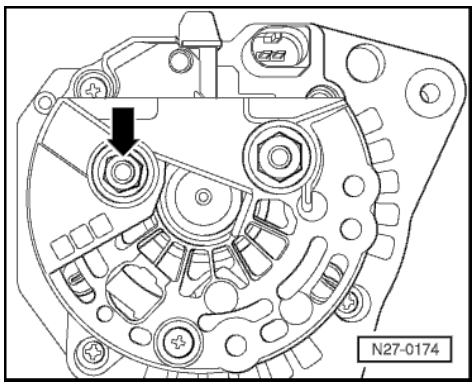

- Danger of fires from sparks.
- Damage to electronic components and control units due to excessive voltages.

◀ The tightening torque for the B+ wire -arrow- securing nut is 15 Nm.

Checking alternator carbon brushes, vehicles 05.99 >

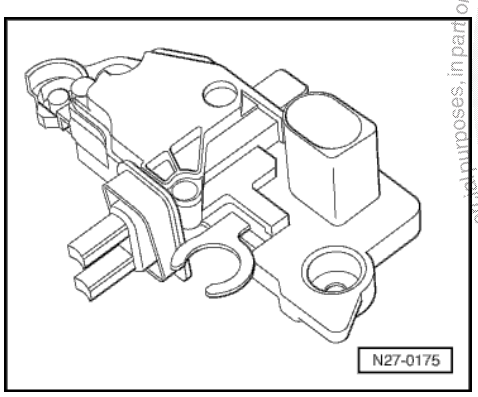

◀ Length of new carbon brushes = 12mm

Wear limit = 5mm

Carbon brush tolerance to one another = 1mm

Protected by copyright. Copying for private or commercial purposes, in part or in whole, is not permitted unless authorised by Volkswagen AG. Volkswagen AG does not guarantee or accept any liability with respect to the correctness of information in this document. Copyright by Volkswagen AG.

satelettronica

Removing and installing voltage regulator for alternator, vehicles 05.99 >

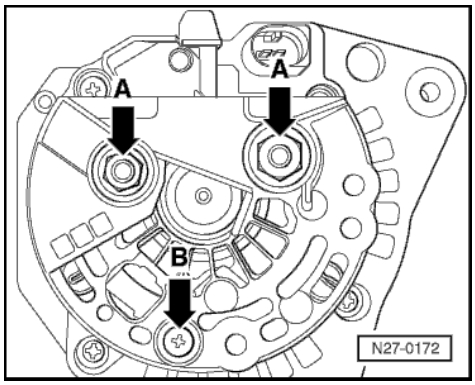

◀ - Remove securing nuts -arrow A- and securing screw -arrow B- for protective cap and take protective cap off.

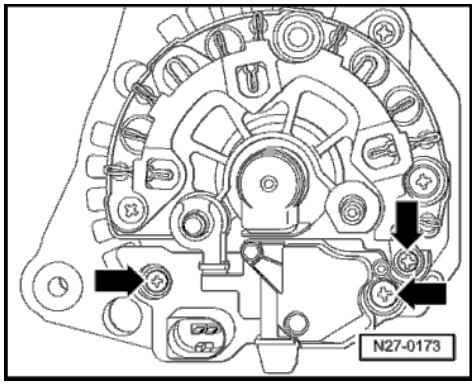

◀ - Remove screws -arrows- securing voltage regulator and take voltage regulator out.

Installation is carried out in the reverse sequence.

Replacing alternator ribbed belt pulley

Special tools, testers, measuring instruments and auxiliary items required

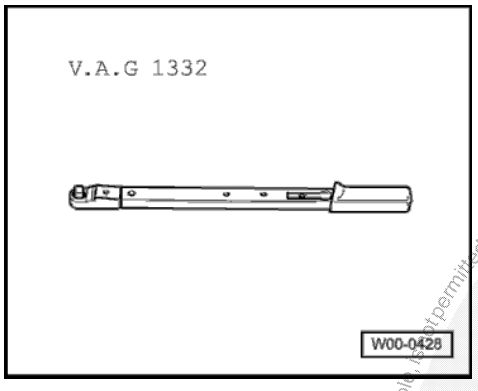

♦ V.A.G 1332 Torque wrench (40 - 200 Nm)

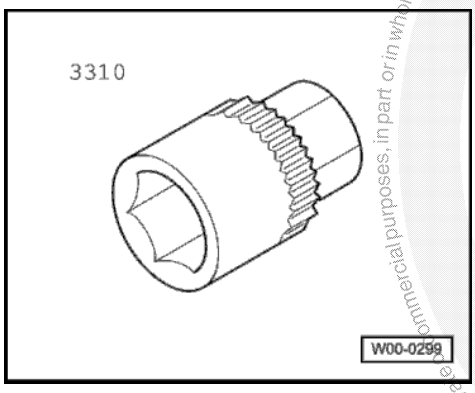

♦ 3310 Socket

Protected by copyright. Copying for private or commercial purposes, in part or in whole, is not permitted unless authorised by Volkswagen AG. Volkswagen AG does not guarantee or accept any liability with respect to the correctness of information in this document. Copyright by Volkswagen AG.
satelettronica

Removing and installing ribbed belt pulley on alternator

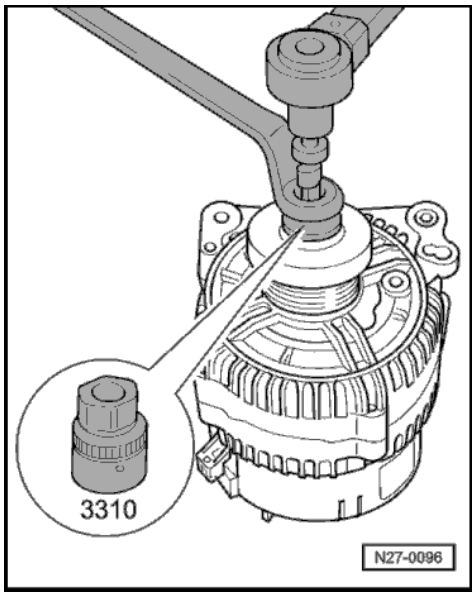

◀ The special tool -socket 3310- is required to loosen/tighten the ribbed belt pulley on alternator.

The ribbed belt pulley securing nut tightening torque is 65 Nm.

Removing and installing ribbed belt pulley with freewheel

Note:

Freewheel disc can be retrofitted in vehicles with a Bosch alternator ▸ 04.99.

Freewheel disc can not be retrofitted in vehicles with a Valeo alternator ▸ 04.99.

Valeo alternators must be renewed complete for a Bosch alternator.

The ribbed belt pulley with freewheel is the same for all alternators (various manufacturers), fitted in vehicles 05.99 ▸

Installing ribbed ribbed belt pulley with freewheel

Special tools, testers, measuring instruments and auxiliary items required

♦ V.A.G 1332 Torque wrench (40 - 200 Nm)

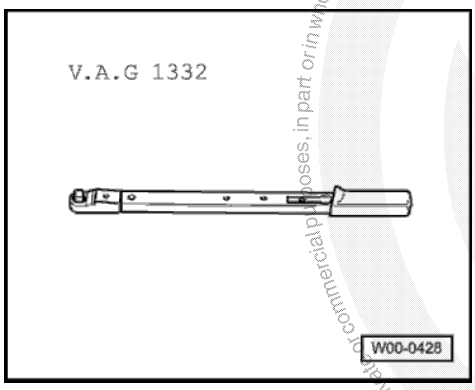

satelettronica
Protected by copyright. Copying for private or commercial purposes, in part or in whole, is not permitted unless authorised by Volkswagen AG. Volkswagen AG does not guarantee or accept any liability with respect to the correctness of information in this document. Copyright by Volkswagen AG.

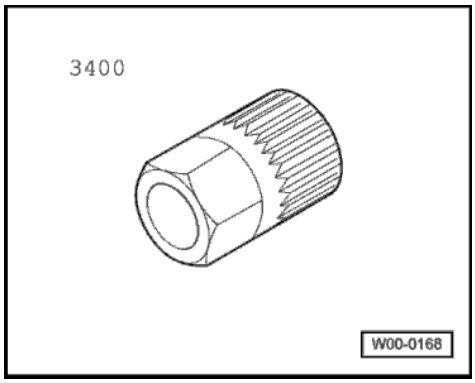

♦ 3400 Multi-spline adapter

- First remove existing ribbed belt pulley => Page 27-84.
- Insert multi-spline adapter 3400 in freewheel pulley.
- Screw freewheel disc by hand onto alternator drive shaft onto stop.

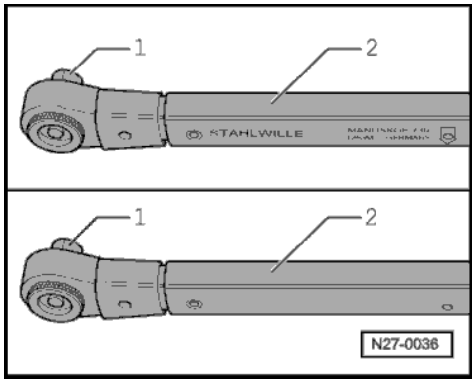

The torque wrench must be rearranged before installing the freewheel pulley as follows:

- Release socket drive -1- and pull off grip -2-.
- Turn torque wrench grip -2- through 180°and reinsert socket drive.
- Set wrench direction of turn on socket drive to anti-clockwise.

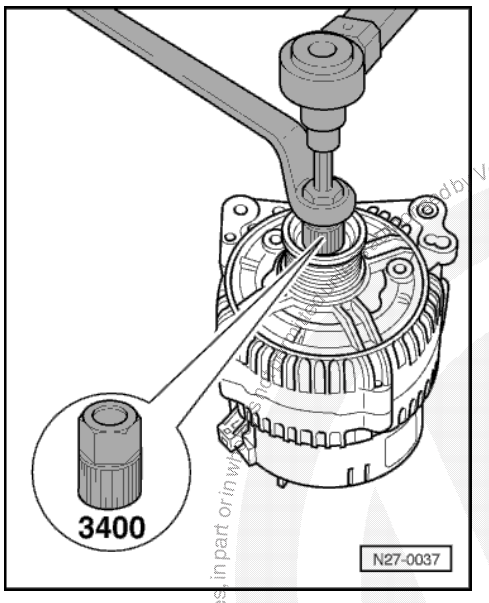

- Set torque wrench tightening torque to 80 Nm.
- Fit 6 mm AF socket onto alternator drive shaft.
- Counter-hold multi point key 3400 with 17 mm AF ring spanner and tighten freewheel pulley to 80 Nm by turning alternator drive shaft anti-clockwise with torque wrench.
- Clip protective cap onto freewheel pulley.

satelettronica
Protected by copyright. Copying for private or commercial purposes, in part or in whole, is not permitted unless authorised by Volkswagen AG. Volkswagen AG does not guarantee or accept any liability with respect to the correctness of information in this document. Copyright by Volkswagen AG.

Removing and installing dash panel insert

Warning!

Before working on the electrical system disconnect the battery earth strap.

Notes:

- If the vehicle has a security-coded radio, obtain the correct anti-theft code number before disconnecting the battery.
- When the battery is reconnected, check operation of electrical equipment (radio, clock and electric window lifters) according to Workshop Manual or Owner's Manual.
- It is not necessary to remove the steering wheel. In the following illustrations the steering wheel, for clarity, is not shown.

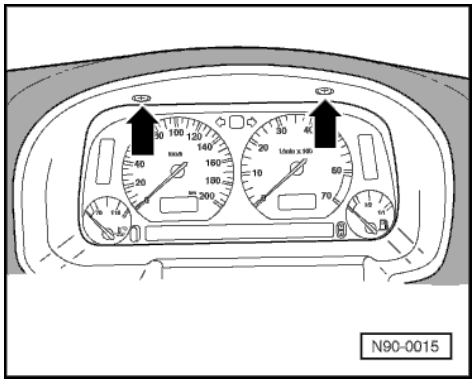

◀ - Remove securing screws at top -arrows-.
- Pull plastic trim out forwards.

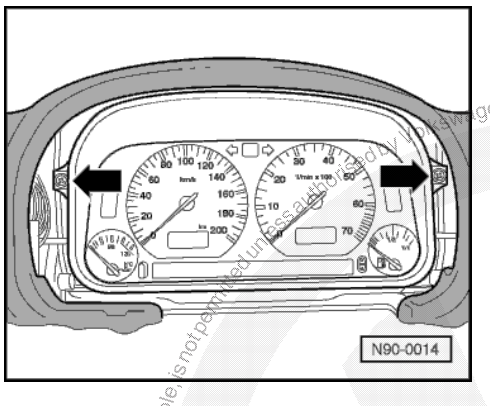

◀ - Remove both securing screws left and right -arrows-.
- Tip dash panel insert forwards.
- Disconnect multi-pin connector on rear of dash panel insert.
- Remove dash panel insert.

Installing dash panel insert

Install in reverse order.

Protected by copyright. Copying for private or commercial purposes, in part or in whole, is not permitted unless authorised by Volkswagen AG. Volkswagen AG does not guarantee or accept any liability with respect to the correctness of information in this document. Copyright by Volkswagen AG.
satelettronica

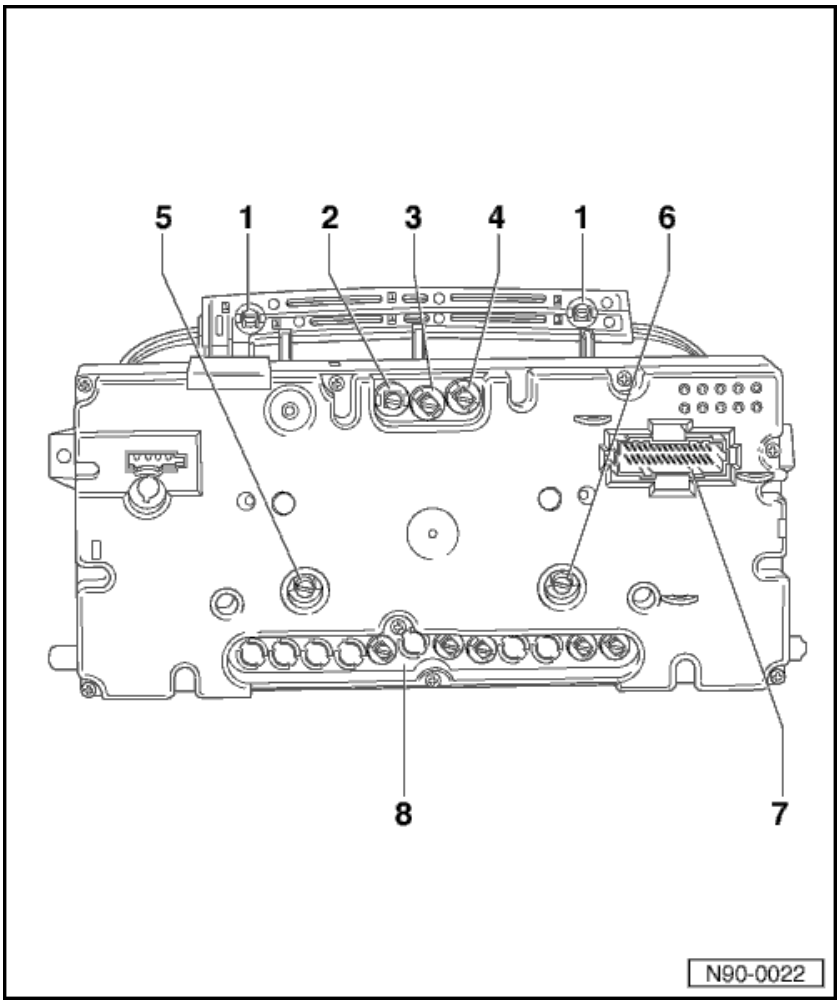

Renewing bulbs in dash panel insert (VDO)

Notes:

- The dash panel insert must not be dismantled.
- Information on checking voltages and bulbs with test box V.A.G. 1598.

=> Current flow diagrams, Electrical fault finding and Fitting locations

- Fault finding programmes for specific systems and current circuits

=> Current flow diagrams, Electrical fault finding and Fitting locations

1 - Bulb with holder (bulb for dash panel illumination L10)
- 12 V / 1.2 W

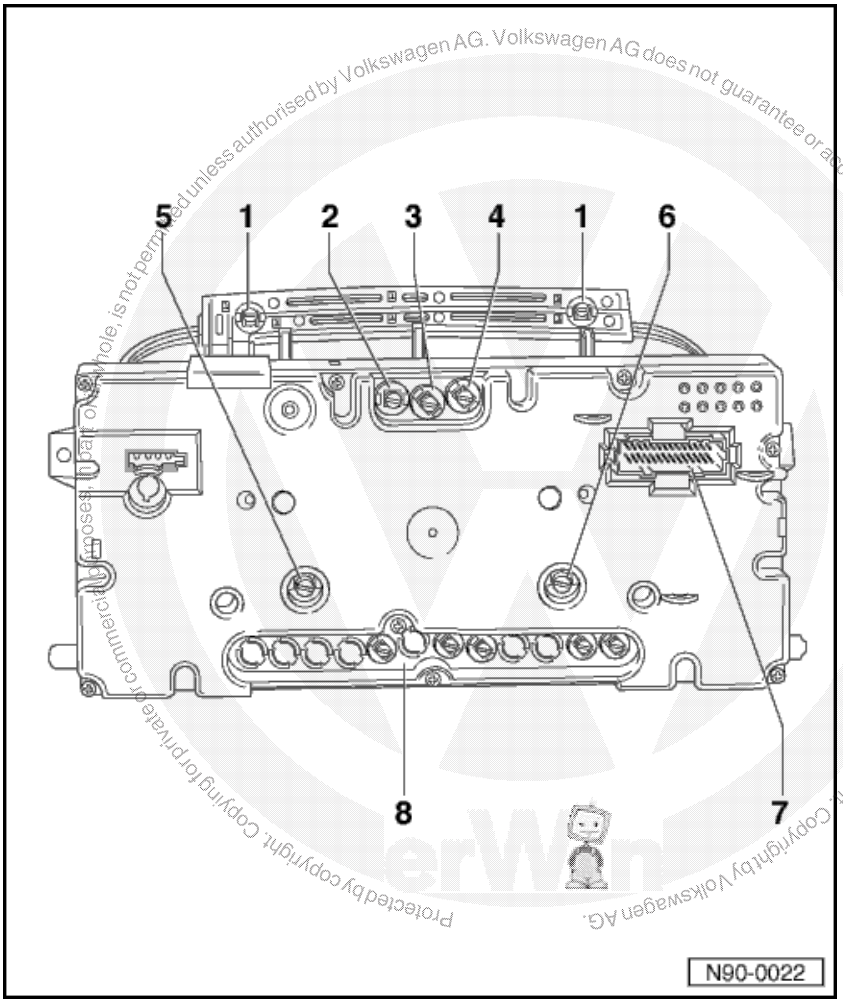

2 - Bulb with holder (right turn signal warning lamp K94)
- 12 V / 1.1 W

3 - Bulb with holder (main beam warning lamp K1)
- 12 V / 1.1 W

4 - Bulb with holder (left turn signal warning lamp K65)
- 12 V / 1.1 W

5 - Bulb with holder (bulb for digital clock illumination)
- 12 V / 1.1 W

satelettronica

Protected by copyright. Copying for private or commercial purposes, in part or in whole, is not permitted unless authorised by Volkswagen AG. Volkswagen AG does not guarantee or accept any liability with respect to the correctness of information in this document. Copyright by Volkswagen AG.

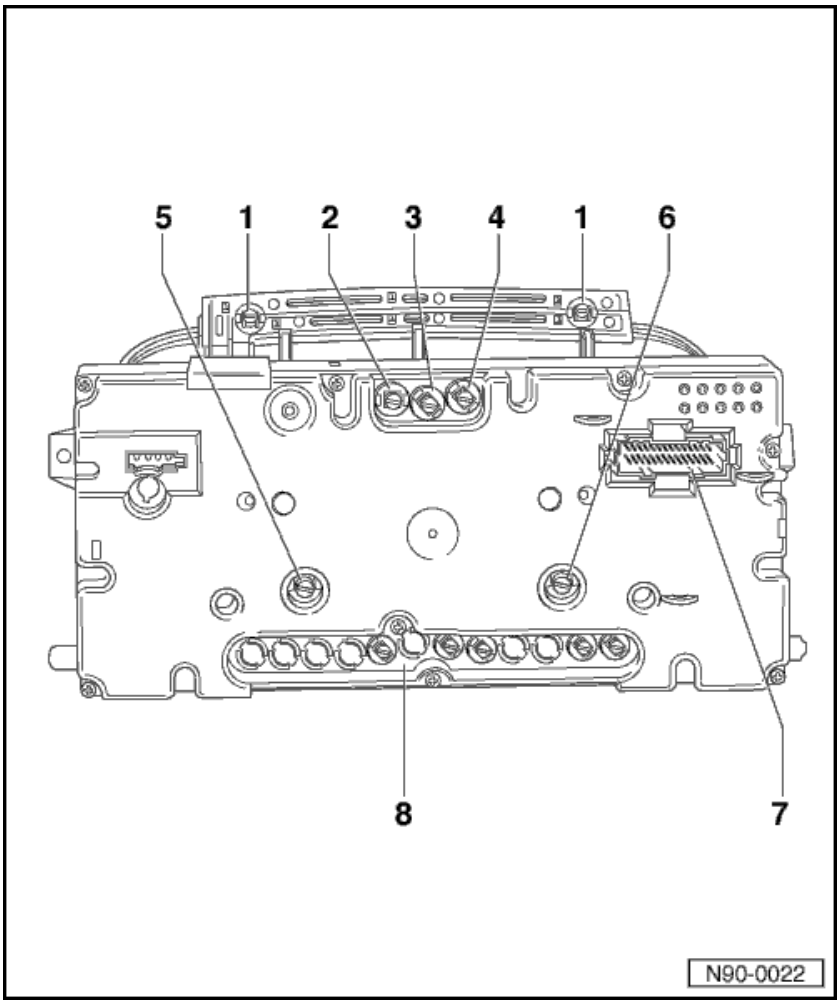

6 - Bulb with holder (bulb for odometer illumination)
- 12 V / 1.1 W

7 - Multi-pin connector on dash panel insert
- Connector contact assignment => Page 90-10

8 - Bulb with holder (various warning lamps depending upon level of vehicle equipment)
- 12 V / 1.1 W

satelettronica

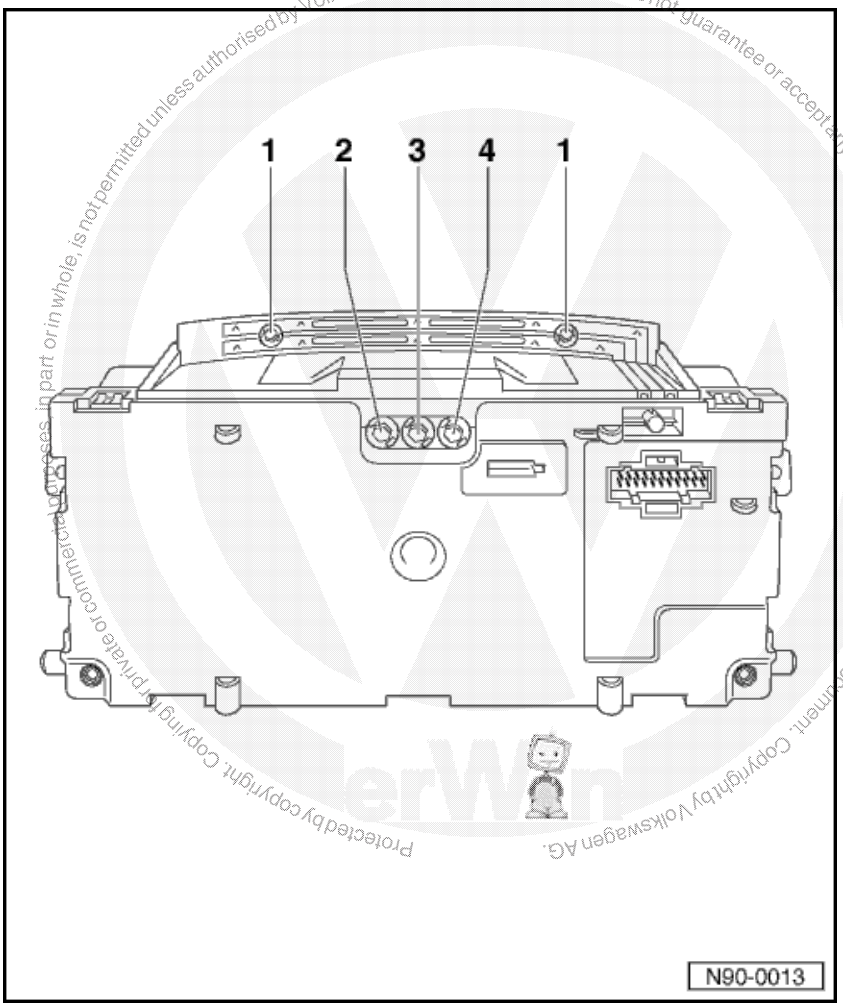

Protected by copyright. Copying for private or commercial purposes, in part or in whole, is not permitted unless authorised by Volkswagen AG. Volkswagen AG does not guarantee or accept any liability with respect to the correctness of information in this document. Copyright by Volkswagen AG.

Renewing bulbs in dash panel insert (MOTOMETER)

Notes:

- The dash panel insert must not be dismantled.
- Information on checking voltages and bulbs with test box V.A.G. 1598.

=> Current flow diagrams, Electrical fault finding and Fitting locations

- Fault finding programmes for specific systems and current circuits

=> Current flow diagrams, Electrical fault finding and Fitting locations

1 - Bulb with holder (bulb for dash panel illumination L10)
- 12 V / 1.2 W

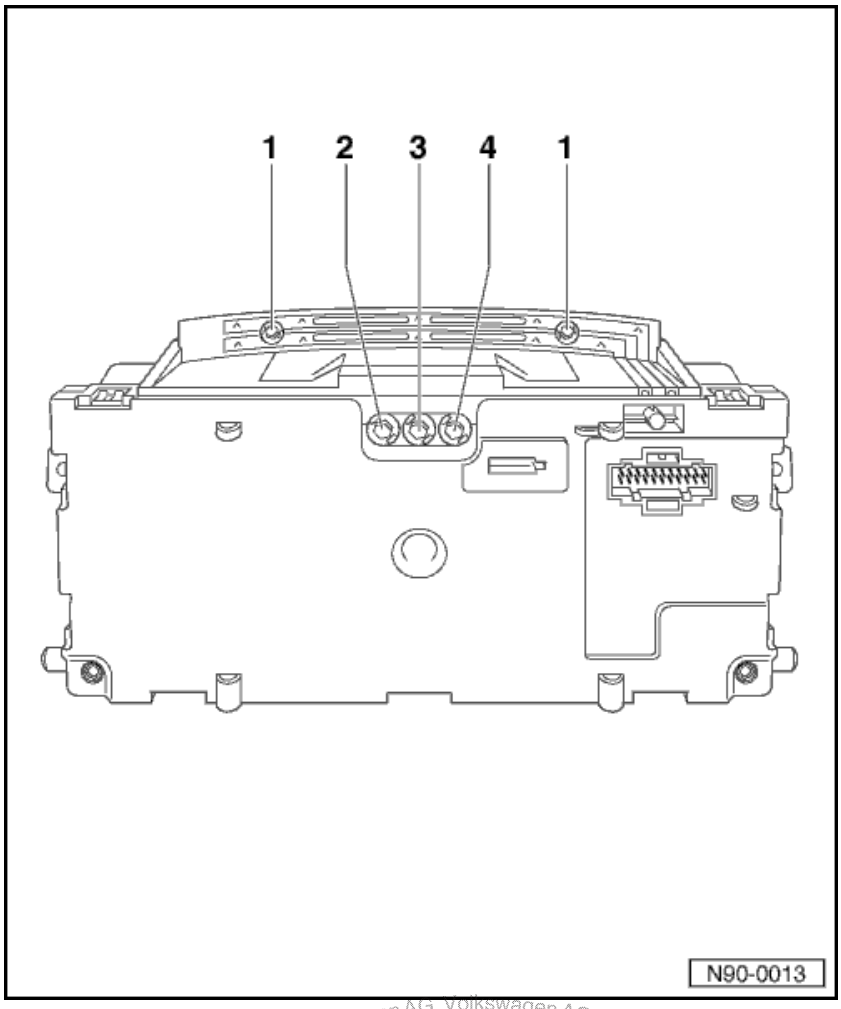

2 - Bulb with holder (right turn signal warning lamp K94)
- ♦ 12 V / 1.1 W

3 - Bulb with holder (main beam warning lamp K1)
- ♦ 12 V / 1.1 W

4 - Bulb with holder (left turn signal warning lamp K65)
- ♦ 12 V / 1.1 W

satelettronica

Protected by copyright. Copying for private or commercial purposes, in part or in whole, is not permitted unless authorised by Volkswagen AG. Volkswagen AG does not guarantee or accept any liability with respect to the correctness of information in this document. Copyright by Volkswagen AG.

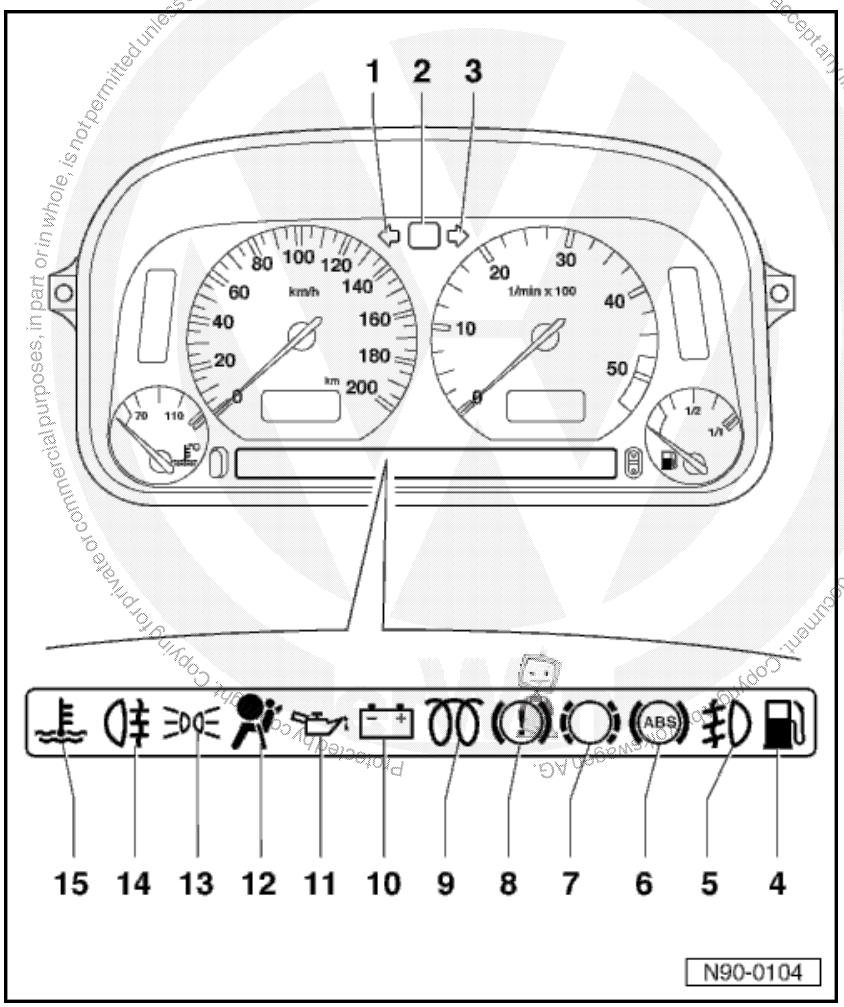

Dash panel insert (VDO) warning lamp symbols

1 - Turn signal, left

2 - Main beam

3 - Turn signal, right

4 - Fuel reserve indicator (vacant)

5 - Fog lights (vacant)

6 - ABS (vacant)

7 - Brake pad wear warning lamp (vacant)

8 - Brake warning/brake system fault warning lamp

9 - Glow period warning lamp

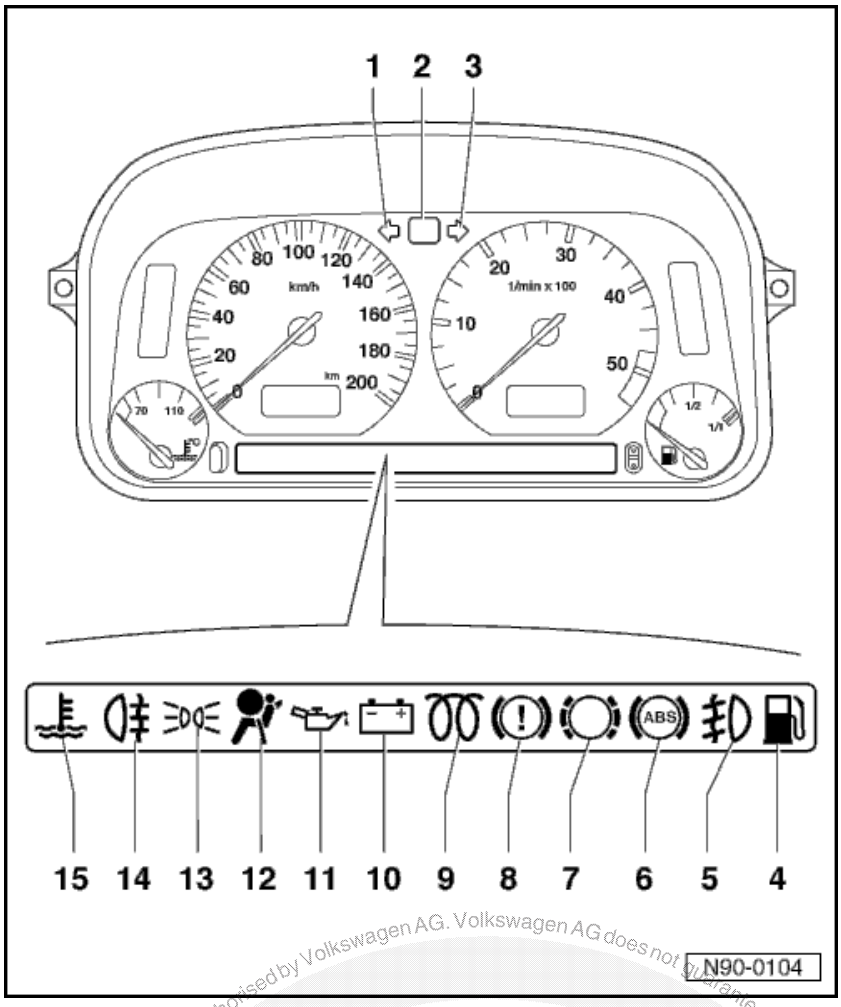

10 - Alternator

11 - Oil pressure

12 - Airbag (not connected)

13 - Side mounted turn signals/side light warning lamp (not connected)

14 - Rear fog lights

15 - Coolant

satelettronica

Protected by copyright. Copying for private or commercial purposes, in whole or in part, is not permitted unless authorised by Volkswagen AG. Volkswagen AG does not guarantee or accept any liability with respect to the correctness of this document. Copyright by Volkswagen AG.

Connector contact assignment on dash panel insert

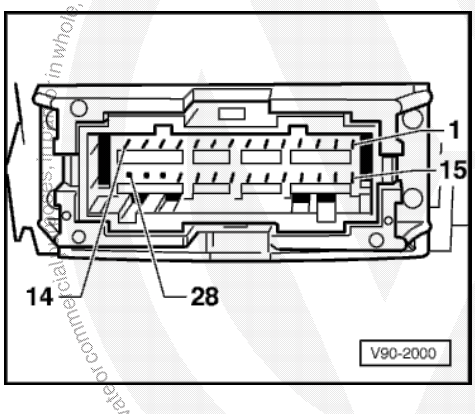

- 1 -Vacant
- 2 -Coolant shortage indicator
- 3 -Terminal 31, earth
- 4 -Vacant
- 5 -Terminal 31, electronic earth
- 6 -MFI memory switch (Memory)
- 7 -Hall/inductive sender output
- 8 -Oil pressure switch 1.8 bar
- 9 -Oil pressure switch 0.3 bar
- 10 - Terminal 1 / Terminal W
- 11 - Terminal 30, battery positive, clock
- 12 - Terminal 58b, dash panel insert lighting
- 13 - Terminal 15, general
- 14 - Belt
- 15 - Vacant
- 16 - Alternator warning lamp, terminal 61
- 17 - Vacant

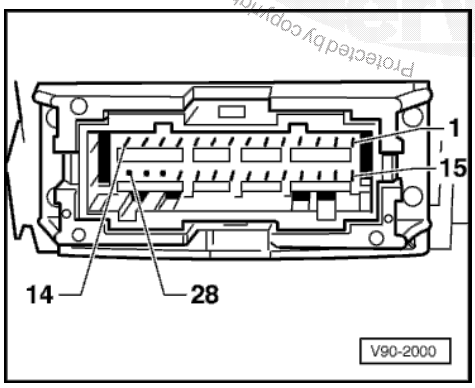

- 18 - Dual circuit brake and handbrake system warning lamp
- 19 - Ambient temperature sensor, signal *
- 20 - Glow period warning lamp / CAT / Check / Choke
- 21 - Fuel gauge
- 22 - Left turn signal warning lamp
- 23 - Coolant temperature gauge
- 24 - Right turn signal warning lamp
- 25 - Main beam warning lamp
- 26 - Vacant

- 27 - Speed signal from speedometer sender (G22), E.-speedometer input
- 28 - Rear fog light

Service interval display

Function

The service interval display electronics is comprised of, amongst other items:

- ♦ a time recorder

and

- ♦ a distance recorder.

The electronics evaluates both recorders so that the customer is informed

- ♦ after a predetermined time period is exceeded or
- ♦ after a predetermined distance is reached

via the service interval display that a service is required (according to whichever occurs first).

Service interval display

The display appears for a few seconds after switching on the ignition in place of the mileage display in the odometer.

If no service is necessary IN 00 will be displayed.

If a service (service details) is due, on one of the following flashing displays appears for about 3 seconds even after starting the engine:

OEL	(Engine oil change) or
IN 01	(Inspection service every 12 months) or
IN 02	(Inspection service every 30,000 km/20,000 miles)

After a service has been carried out, each service affected must be called-up individually and zeroed.

- ♦ If the Inspection service IN 02 is carried out, the OEL,IN 01 and IN 02must be zeroed.
- ♦ If the Inspection service IN 01 is carried out, the OEL and IN 01 must be zeroed.

Zeroing service interval display

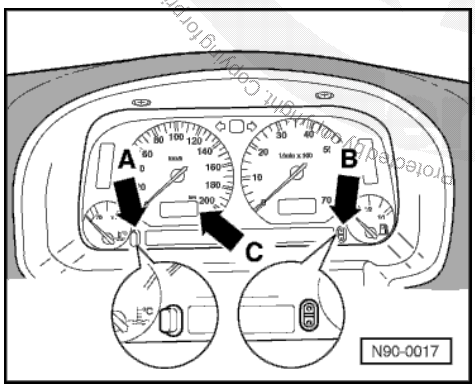

- With ignition switched on, press and hold the button -arrow A- below the speedometer.
- Switch off ignition and release button. The word OEL can be seen in the display -arrow C-.
- Press the digital clock lower button -arrow B- until, five dashes (- - - - -) appear. Only then is the service reset.
- By again pressing the button -arrow A- below the speedometer the other service types will be displayed and can be reset individually.
- Switch on ignition and after IN 00 appears switch off again.

satelettronica

Flexible service interval display

From model year 1996 the flexible service interval display has been introduced but only on vehicles with 1.9 ltr./47kW - Cat. diesel engine, engine code 1Y.

Function

With the flexible service interval display, in addition to the time and distance the

- engine oil temperatures

and the

- engine oil carbon content

are monitored electronically and used to calculate service intervals.

Depending on how vehicle is operated (Driving conditions/engine stress) results in a distance of between 7,500 km and 15,000 km (5,000 to 10,000 miles) or time a period of between 8 and 12 months to the next service.

The flexible service interval display is different.

The display appears for a few seconds after switching on the ignition in place of the mileage display in the odometer.

If no service is necessary INSP-0 will be displayed.

If a service is due, the following appears in the display for about 3 seconds even after starting the engine:

Service table

Indicated on display :	Type of service :
OEL alternating with INSP	Engine oil change
or :	
INSP-1	Inspection service every 12 months
or :	
INSP-2	Inspection service every 30,000 km (approx. 20,000 miles)

After a service has been carried out, each service affected must be called-up individually and zeroed.

Protected by copyright. Copying for private or commercial purposes, in part or in whole, is not permitted unless authorised by Volkswagen AG. Volkswagen AG does not guarantee or accept any liability with respect to the correctness of information in this document. Copyright by Volkswagen AG.

satelettronica

Zeroing flexible service interval display

- If the Inspection service INSP-2 is carried out, the OEL,INSP-1 and INSP-2must be zeroed.
- If the Inspection service INSP-1 is carried out, the OEL and INSP-1 must be zeroed.

Resetting service interval display:

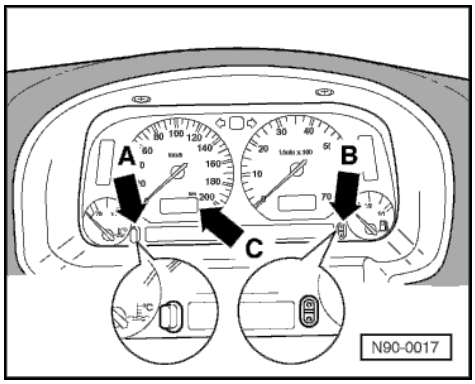

- With ignition switched on, press and hold the button -arrow A- below the speedometer.
- Switch off ignition and release button. The word OEL can be seen in the display.
- Press the digital clock lower button -arrow B- until, five dashes (- - - - -) appear. Only then is the service reset.
- By again pressing the button -arrow A- below the speedometer the other service types will be displayed and can be reset individually.
- Switch on ignition and after IN 00 appears switch off again.

Protected by copyright. Copying for private or commercial purposes, in part or in whole, is not permitted unless authorised by Volkswagen AG. Volkswagen AG does not guarantee or accept any liability with respect to the correctness of information in this document. Copyright by Volkswagen AG.

satelettronica

Entering service interval data

Notes:

- Only necessary after replacing a dash panel insert.
- The data must be read off before exchanging the dash panel insert.
- If the data cannot be read off (defective dash panel insert) the data from the service schedule and the odometer display must be entered.

Displaying service details

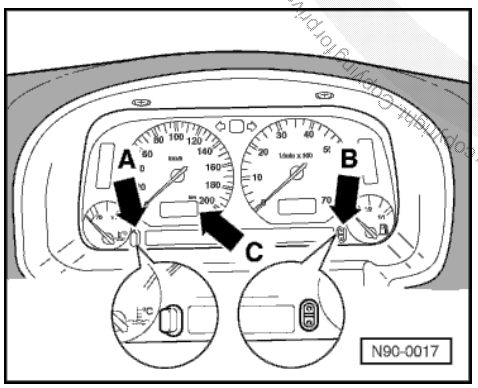

- With ignition switched on, press and hold the button -arrow A- below the speedometer.
- By additionally pressing the digital clock minute button (lower button) arrow -B- the service details will be displayed. OEL1.S(OIL1.S) will appear in the odometer display -arrow C-.
- By again pressing the button -arrow A- below the speedometer the following displays will appear one after the other: OEL2.S,IN01.S,IN02.S.

Note:

The .S stands for setting mode.

Explanation of service details

OEL1.S	Distance recorder for engine oil change
OEL2.S	Time recorder for engine oil change
IN01.S	Time recorder for inspection service every 12 months
IN02.S	Distance recorder for inspection service every 30,000 km/20,000 miles

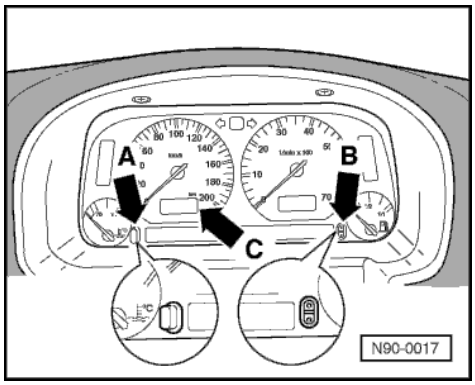

Entering data

- Durch Drücken des Minutenknopfes der Digitaluhr (unterer Druckpunkt) Taste -Pfeil B- wird die noch verbleibende Wegstrecke oder Zeit bis zum Serviceereignis angezeigt.
- By repeatedly pressing the button, the distance recorder will decrease in steps of 500 km and the time recorder in steps of 1 month. After the smallest figure the largest will follow again.
- If the ignition is switched off or engine started, the setting mode (entering data) will be exited.

Protected by copyright. Copying for private or commercial purposes, in part or in whole, is not permitted unless authorised by Volkswagen AG. Volkswagen AG does not guarantee or accept any liability with respect to the correctness of information in this document. Copyright by Volkswagen AG.

satelettronica

Windscreen wiper system

Warning!

Before working on the electrical system disconnect the battery earth strap.

Notes:

- If the vehicle has a security-coded radio, obtain the correct anti-theft code number before disconnecting the battery.
- When the battery is reconnected, check operation of electrical equipment (radio, clock and electric window lifters) according to Workshop Manual or Owner's Manual.

Protected by copyright. Copying for private or commercial purposes, in part or in whole, is not permitted unless authorised by Volkswagen AG. Volkswagen AG does not guarantee or accept any liability with respect to the correctness of information in this document. Copyright by Volkswagen AG.

satelettronica

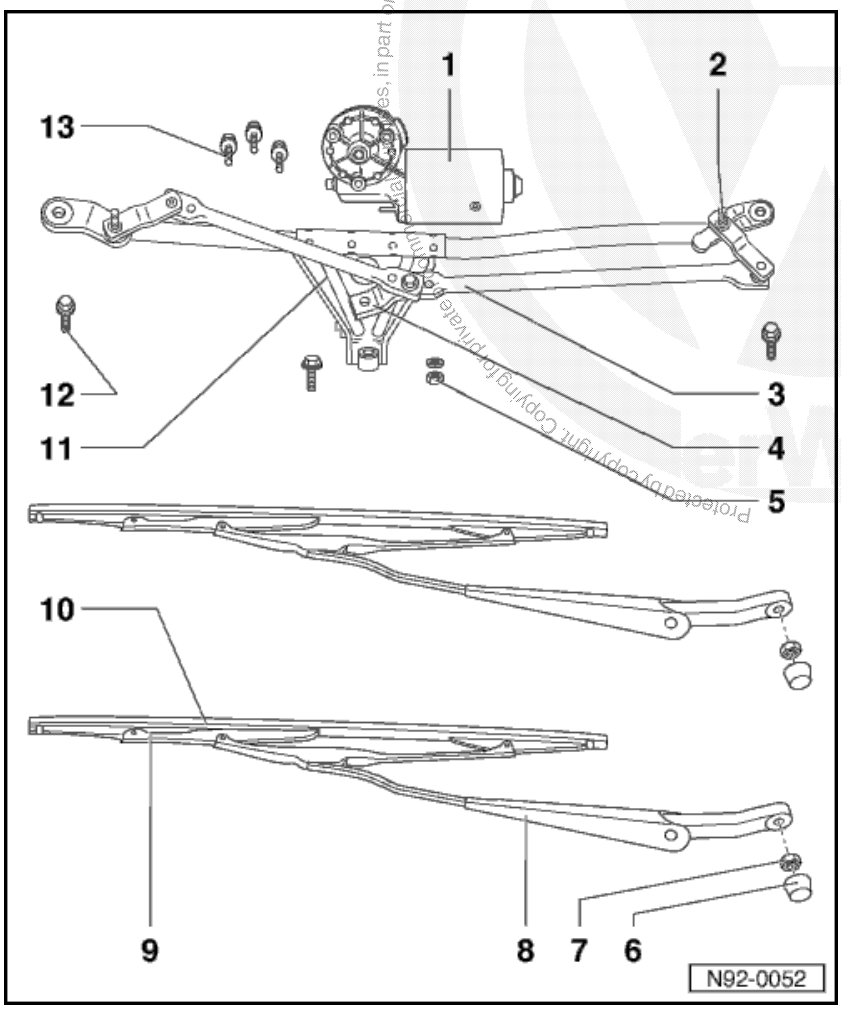

Windscreen wiper system assembly overview

1 - Wiper motor
- Removing wiper frame =>Page 92-6

2 - Drive shaft

3 - Connecting rod

4 - Crank
- Setting park position =>Page 92-7

5 - Hexagon nut 13 mm AF
- 20 Nm

6 - Cover cap

7 - Hexagon nut 15 mm
- 16 Nm

8 - Wiper arm

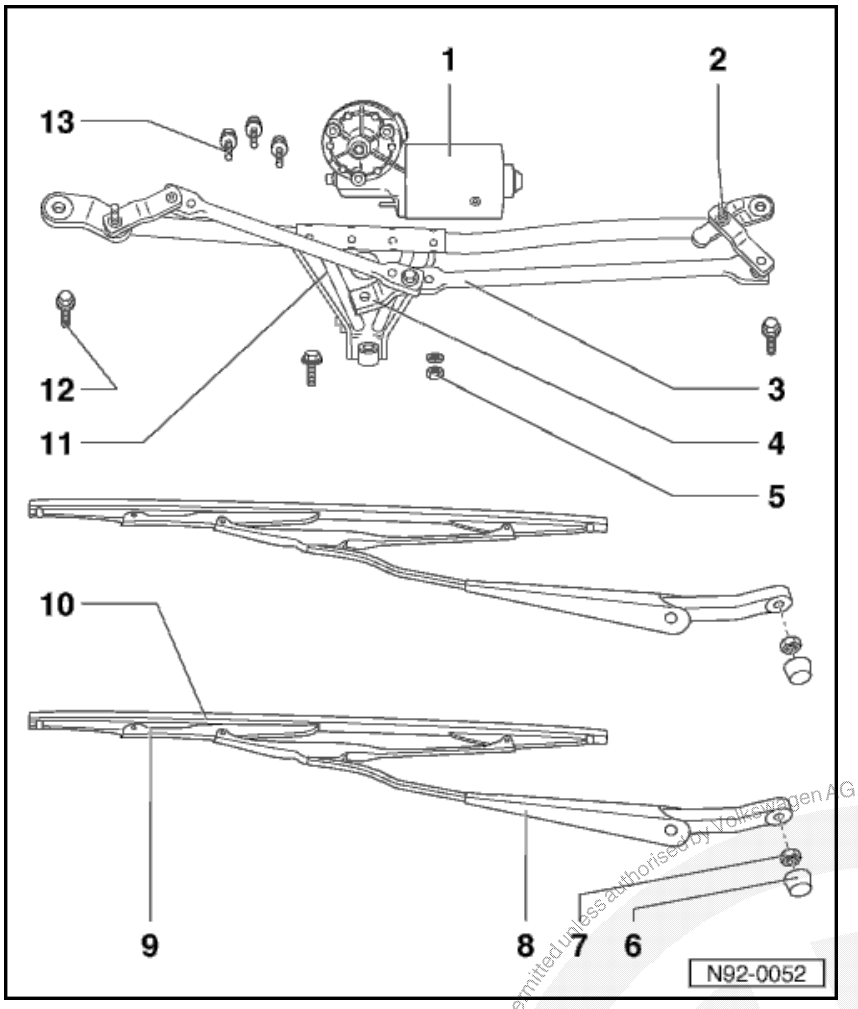

9 - Wiper blade

- Adjusting park position =>Page 92-10

10 - Wiper blade rubber

- Removing and installing wiper blade rubber => Page 92-11

11 - Wiper frame

12 - Hexagon bolt 10 mm AF

- 5 Nm

13 - Hexagon bolt 10 mm AF

- 5 Nm

satelettronica

Protected by copyright. Copying for private or commercial purposes, in part or in whole, is not permitted unless authorised by Volkswagen AG. Volkswagen AG does not guarantee or accept any liability with respect to the correctness of information in this document. Copyright by Volkswagen AG.

Removing and installing windscreen wiper system

Special tools, testers, measuring instruments and auxiliary items required

- V.A.G 1331 Torque wrench (5 - 50 Nm)

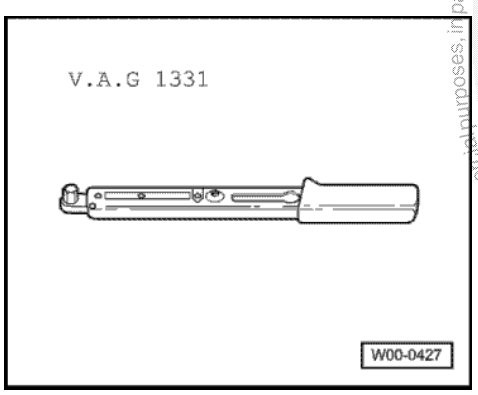

Removing wiper arm

Note:

Before removing the wiper arm ensure the wiper motor is in the end (park) position. Only then can the end position for the wiper arm be set correctly when installing.

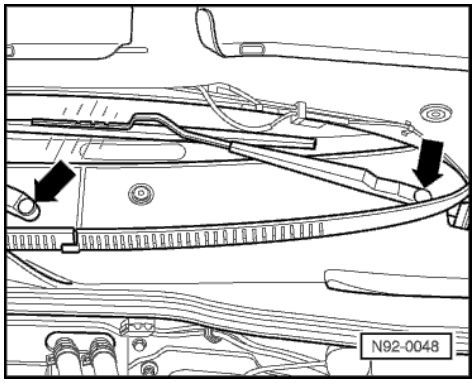

◀ - Lever off black cover caps -arrows- with a screw-driver.

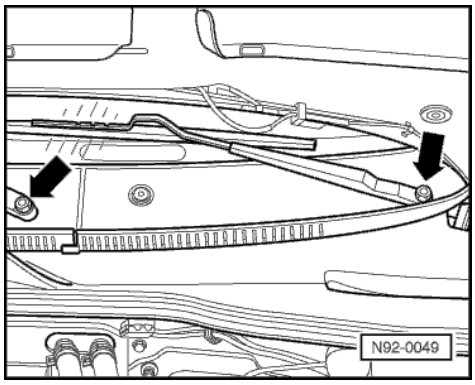

- Loosen hexagon nuts -arrows-, but do not remove completely.
- Move wiper arms lightly until they release.
- Remove hexagon nut completely and take off wiper arms.

Removing cowl panel

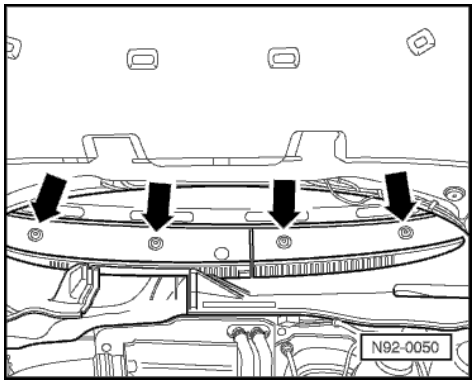

- Remove synthetic screws -arrows-.
- Lever off both cowl grille parts carefully, upwards.

satelettronica

Removing wiper frame with rods and wiper motor

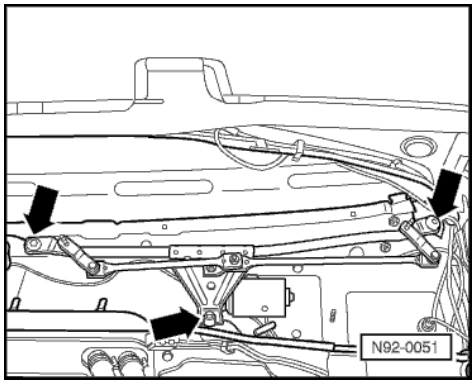

- Unscrew hexagon bolts and hexagon nuts -arrows- and remove washers.
- Pull connector off wiper motor.
- Take out wiper frame complete.

Removing wiper motor from wiper frame

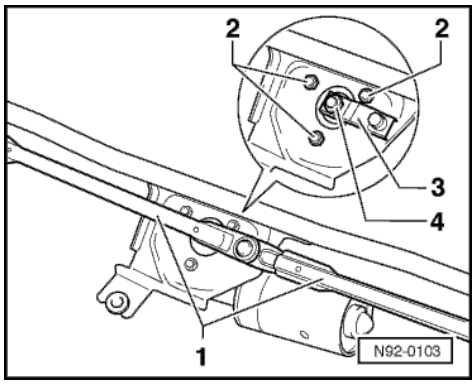

- Lever rods -1- off crank using a large screwdriver.
- Remove M8 hexagon nut -4-.
- Remove crank -3-.
- Remove the three M6 securing bolts -2- for the wiper motor.

Volkswagen AG. Volkswagen AG does not guarantee or accept any liability with respect to the correctness of information in this document. Copyright by Volkswagen AG. Protected by copyright. Copying for private or commercial purposes, in part or in whole, is not permitted unless authorised by Volkswagen AG.

Installing wiper motor in wiper frame

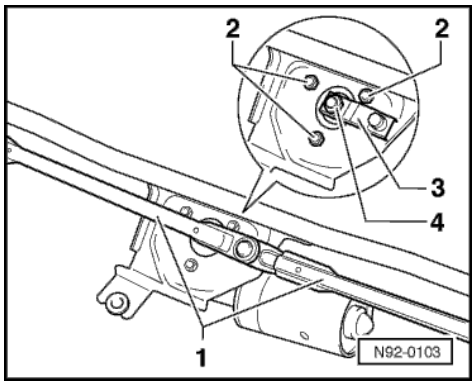

- Run motor to park position, to do this connect connector and operate wiper switch briefly.
- Pull off connector again and tighten motor M6 securing bolts -2-.
- Tightening torque: 5 Nm

Setting park position

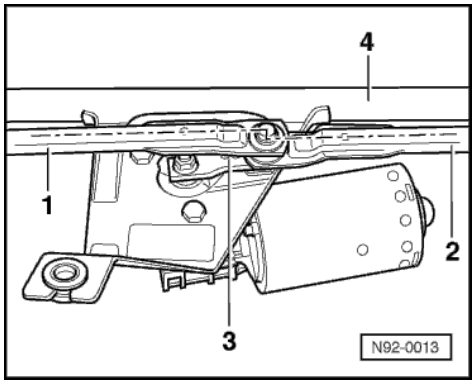

- Let wiper motor run to end position and install.
- Loosen crank -3- and press connecting rod -2- on first and then connecting rod -1-.
- Align connecting rods -1- and -2- corresponding to the centre line shown in the figure.
- Tighten crank -3- securing nut.

Installing wiper frame with rods and wiper motor

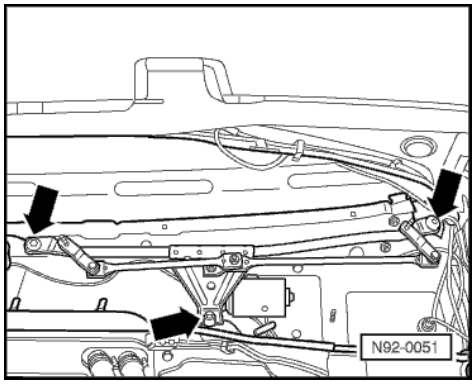

- Insert wiper frame with wiper motor.
- Reconnect connector on wiper motor.
- Install washers and tighten hexagon bolts and hexagon nuts -arrows-.

Installing cowl panel

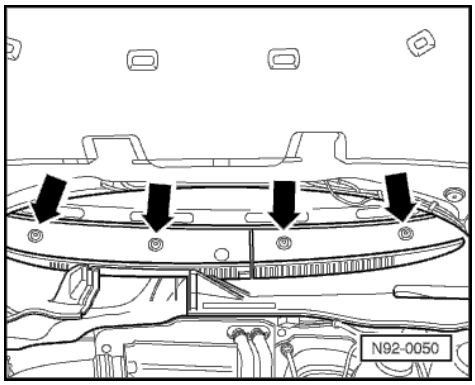

- Insert cowl panel.
- Tighten synthetic screws -arrows-.

Protected by copyright. Copying for private or commercial purposes, in part or in whole, is not permitted unless authorised by Volkswagen AG. Volkswagen AG does not guarantee or accept any liability with respect to the correctness of information in this document. Copyright by Volkswagen AG.
satelettronica

Installing wiper arms

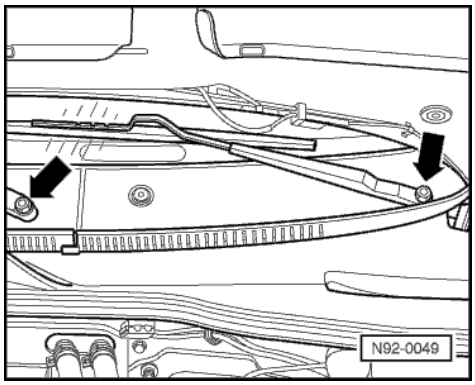

- Fit wiper arms.
- Adjusting wiper blade park position => Page 92-10.
- Tighten hexagon nuts -arrows-.

Wiper arm tightening torque: 16 Nm

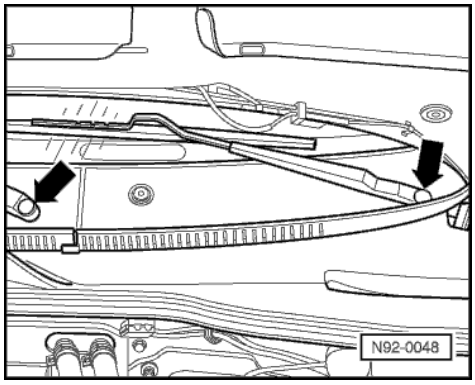

- Press on black cover caps -arrows- with a screw-driver.

Adjusting wiper blade park position

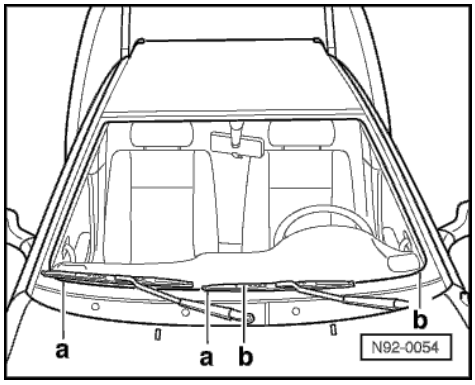

- Adjust wiper blades to the marks on windscreen.

a = Marks for left hand drive vehicles

b = Marks for right hand drive vehicles

Wiper arm tightening torque: 16 Nm

Protected by copyright. Copying for private or commercial purposes, in part or in whole, not permitted unless authorised by Volkswagen AG. Volkswagen AG does not guarantee or accept any liability with respect to the correctness of information in this document. Copyright by Volkswagen AG.
satelettronica

Removing and installing wiper blade rubber

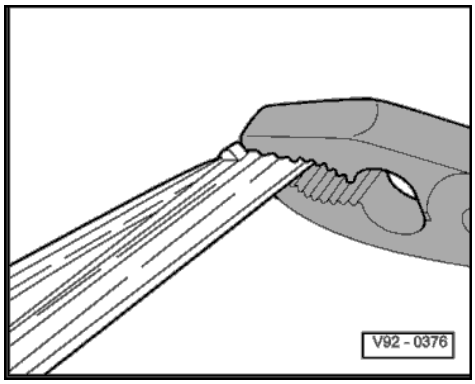

◀ - Using a pair of pliers press together both steel strips on the enclosed side of the rubber, slide sideways out of the upper clip and remove rubber complete with strips from the other clips of the wiper blades.

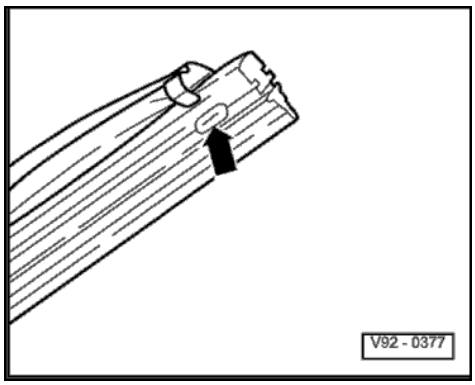

◀ - Insert new rubber into lower clips of wiper blade.
- Insert both strips in the first groove of the rubber so that the recesses in the strips face the rubber and engage in the rubber lugs of the groove.
- Using pliers press both steel strips and rubber together and insert in the upper clips so that the lugs of the clips on both sides engage in the retaining slots -arrow- of the wiper blade rubber.

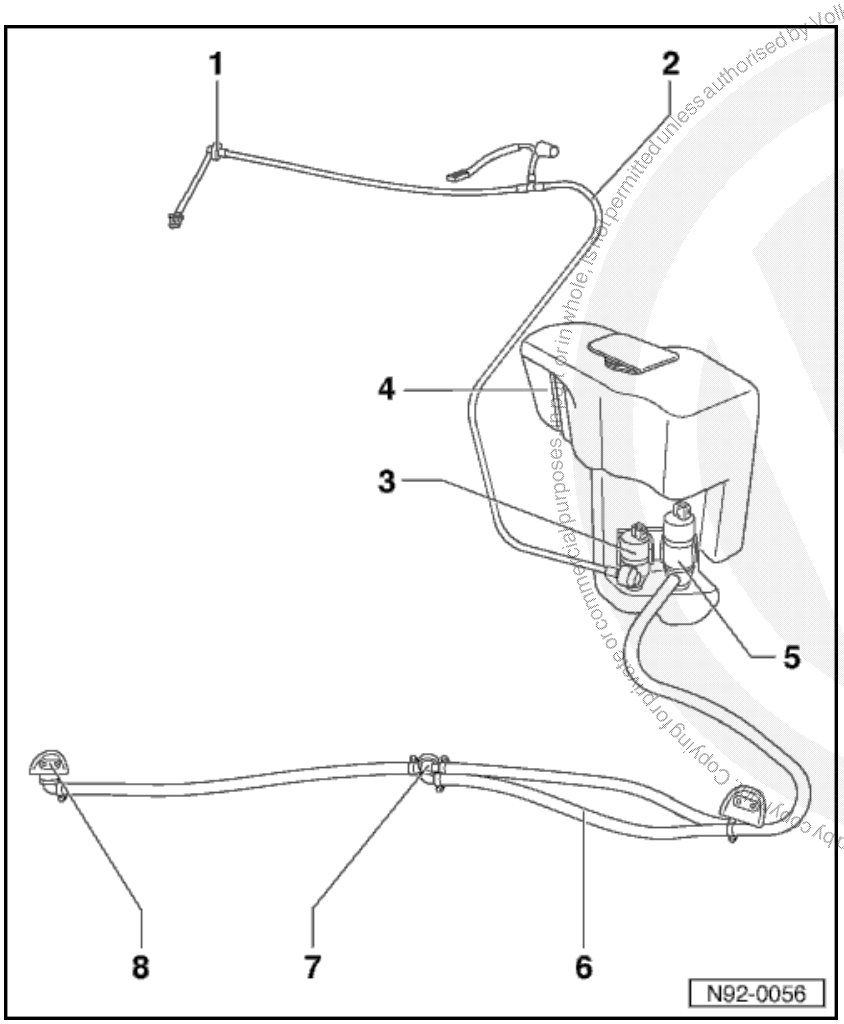

Windscreen washer and headlight washer system

Windscreen washer and headlight washer system assembly overview

1 - Windscreen washer system jets
- ♦ Removing => Page 92-18
- ♦ Adjusting => Page 92-14

2 - Hose for windscreen washer jets

3 - Windscreen washer pump

4 - Reservoir
- ♦ Removing => Page 92-18

5 - Headlight washer system pump

Protected by copyright. Copying for private or commercial purposes, in whole or in part, is not permitted unless authorised by Volkswagen AG. Volkswagen AG does not guarantee or accept any liability with respect to the correctness of information in this document. Copyright by Volkswagen AG.

satelettronica

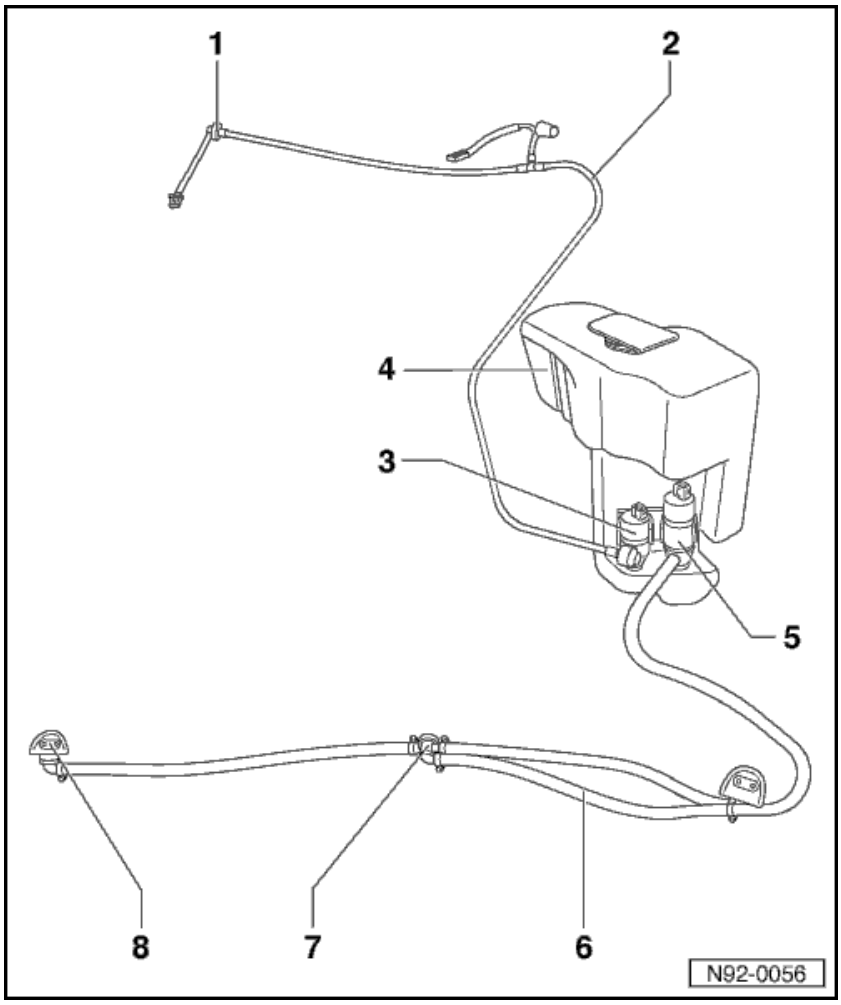

6 - Headlight washer system hose

7 - Back-pressure valve
- Note hose connections

8 - Jets
- Adjusting => Page 92-14
- Before removing, remove front bumpers

=> General body repairs, outer; Repair group 63; Bumpers; Front bumpers

satelettronica

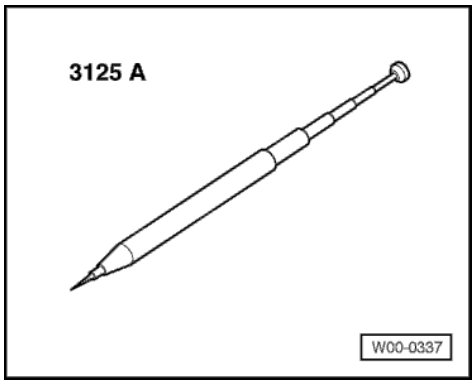

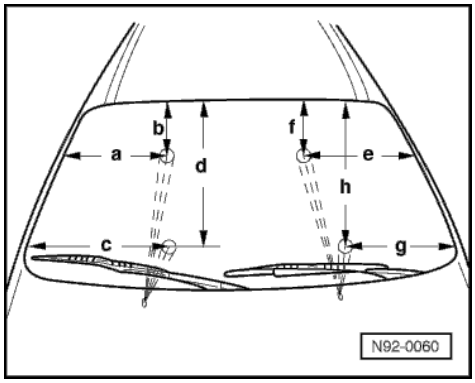

Adjusting windscreen washer system jets

Special tools, testers, measuring instruments and auxiliary items required

- 3125 A Adjusting tool

Notes:

- Renew spray jet (repair measure) if spray jet is irregular or cannot be adjusted to centre of wiped area.
- Never use a needle or similar object, as otherwise water passages in spray jets will be damaged!

- Check jet setting; if necessary, adjust with washer jet tool V.A.G 3125 A.

a	280 mm	e	400 mm
b	300 mm	f	330 mm
c	430 mm	g	330 mm
d	560 mm	h	560 mm

Tolerance: ± 20 mm

Protected by copyright. Copying for private or commercial purposes, in part or in whole, is not permitted unless authorised by Volkswagen AG. Volkswagen AG does not guarantee or accept any liability with respect to the correctness of information in this document. Copyright by Volkswagen AG.

Adjusting headlight washer system jets

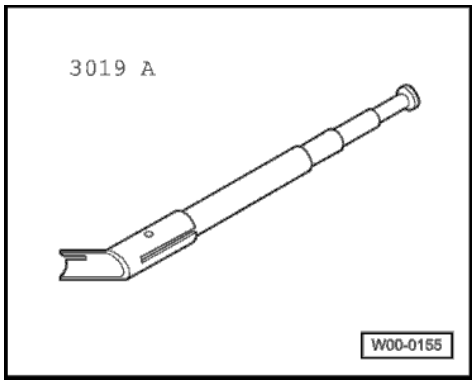

Special tools, testers, measuring instruments and auxiliary items required

♦ 3019 A Adjusting tool

Carry out work sequence as follows:

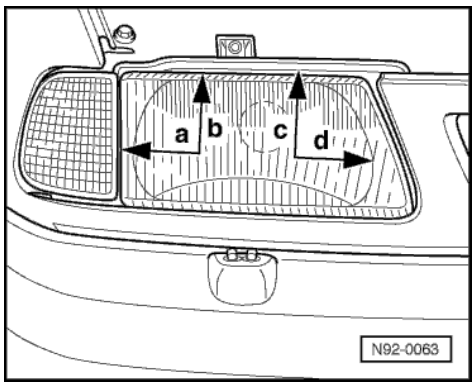

◀ The following jet setting figures are for the left-hand headlight (right-hand mirror image).

- Check jet settings.

Right headlight:

- Set outer right-hand spray jet to following dimensions:

- a -130 mm
- b -60 mm

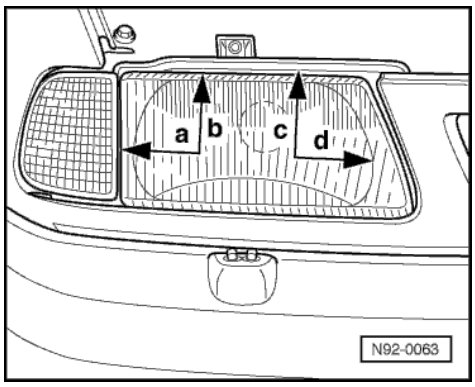

◀ - Set inner right-hand spray jet to following dimensions:

- c -65 mm
- d -125 mm

- Adjust jet with adjusting device 3019 A if necessary.

Jet dimensions for the left headlight are a mirror image.

Removing windscreen washer system jets

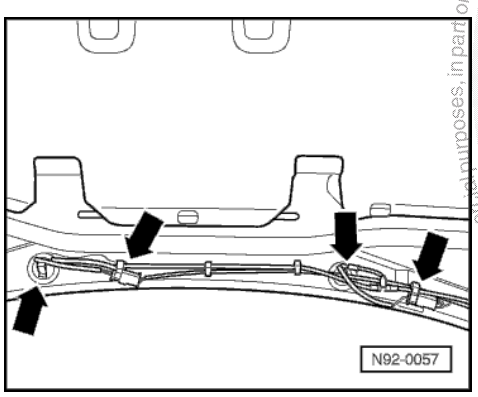

◀ - Pull hose off jet(s) and separate 2 pin connect-or-(s) -arrows-.
- Press locking lug on jet back and push jet out upwards.

satelettronica
Protected by copyright. Copying for private or commercial purposes, in part or in whole, is not permitted unless authorised by Volkswagen AG. Volkswagen AG does not guarantee or accept any liability with respect to the correctness of information in this document. Copyright by Volkswagen AG.

Removing headlight washer system jets

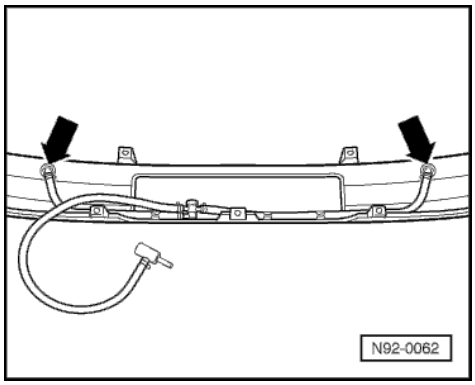

- Remove front bumper.

=> General body repairs, exterior; Repair group 63; Bumpers; Front bumper

- Pull hoses off jets -arrows-.
- Remove jet securing screws -arrows- and take out jet.

Removing windscreen washer and headlight washer system reservoir

Carry out work sequence as follows:

- Pull hose to windscreen washer jets off pump.
- Pull hose to headlight washer system jets off pump.
- Pull connector off window washer pump.

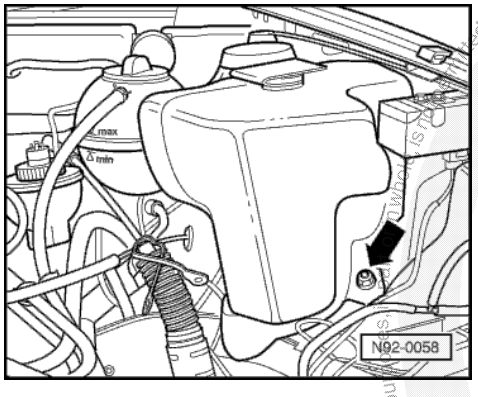

- Pull headlight washer system connector off pump.
- Remove securing nut -arrow- on front side of reservoir.
- Take reservoir out carefully upwards.

Protected by copyright. Copying for private or commercial purposes, in whole or in part, is not permitted unless authorised by Volkswagen AG. Volkswagen AG does not guarantee or accept any liability with respect to the correctness of information in this document. Copyright by Volkswagen AG.
satelettronica

Rear window wipe/wash system

Warning!

Before working on the electrical system disconnect the battery earth strap.

Notes:

- If the vehicle has a security-coded radio, obtain the correct anti-theft code number before disconnecting the battery.
- When the battery is reconnected, check operation of electrical equipment (radio, clock and electric window lifters) according to Workshop Manual or Owner's Manual.

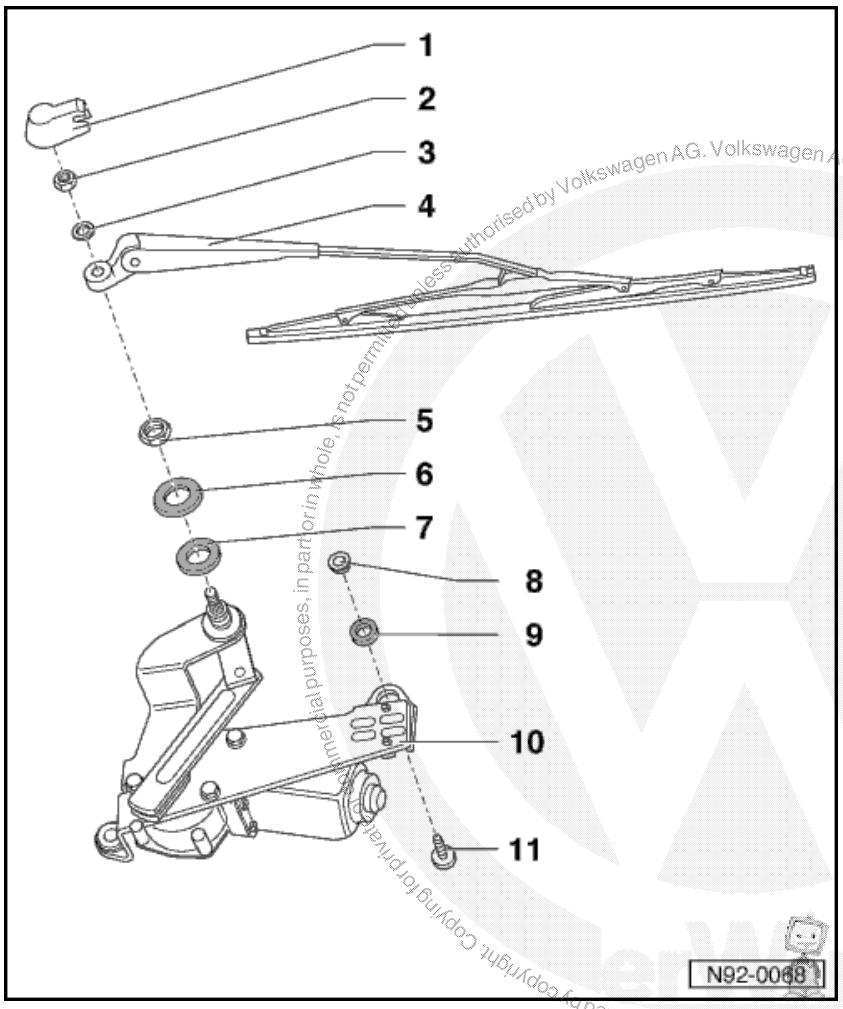

Rear window wiper system assembly overview (Caddy)

1 - Cover cap

2 - Hexagon nut 13 mm AF
- 15 Nm

3 - Washer

4 - Wiper arm with wiper blade
- Adjusting rest position => Page 92-24
- Removing and installing wiper blade rubber => Page 92-11

5 - Hexagon nut 22 mm AF
- 7 Nm

6 - Plastic washer

7 - Rubber ring

Protected by copyright. Copying for private or commercial purposes, in part or in whole, is not permitted unless authorised by Volkswagen AG. Volkswagen AG does not guarantee or accept any liability with respect to the correctness of information in this document. Copyright by Volkswagen AG.

satelettronica

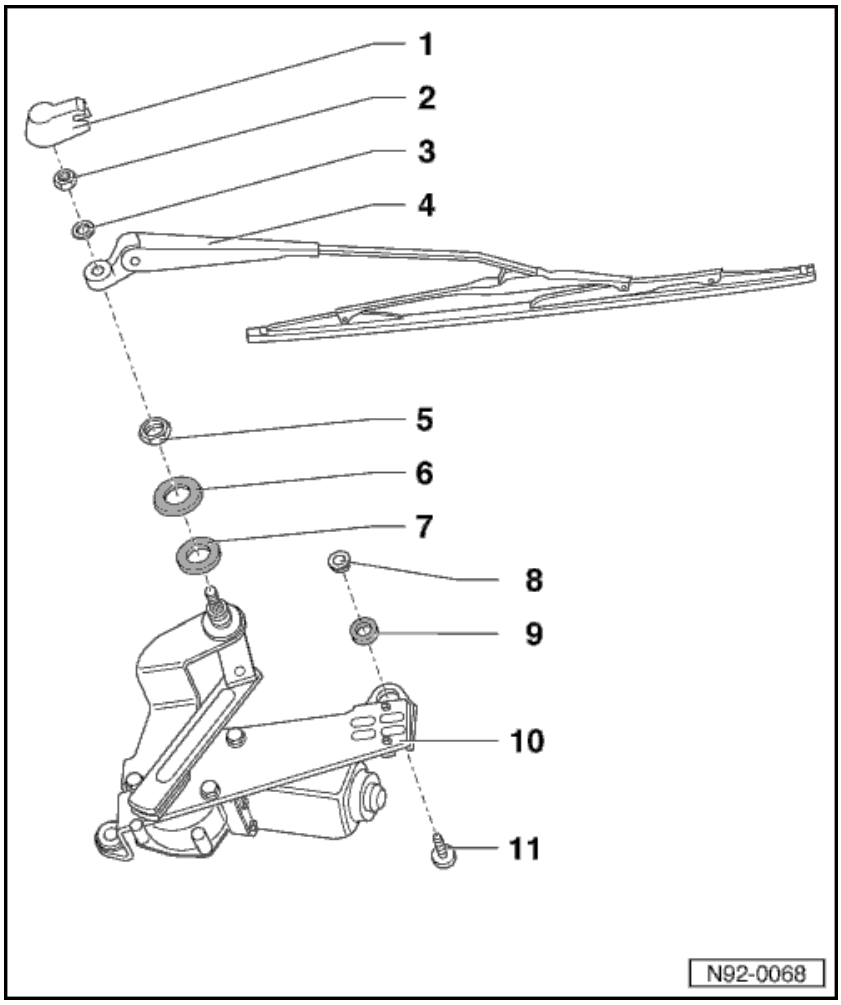

8 - Spacer

9 - Rubber ring

10 - Wiper motor
♦ Removing => Page 92-27

11 - Hexagon bolt 10 mm AF
♦ 5 Nm

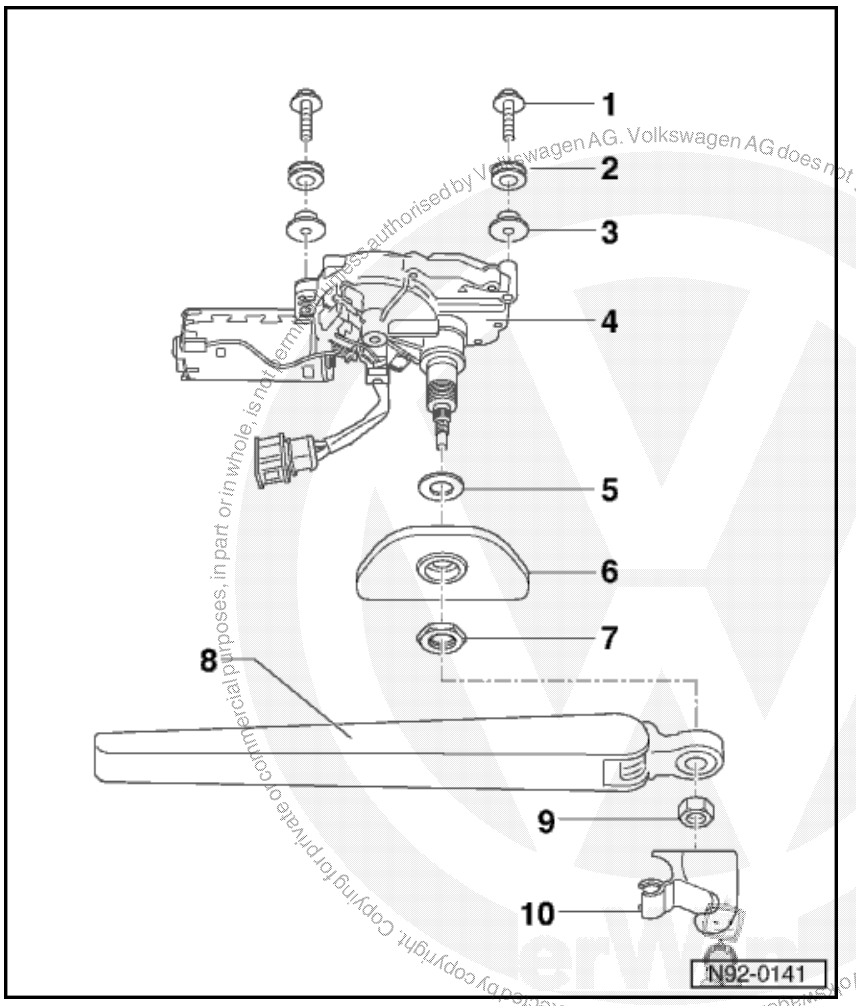

Rear window wiper system assembly overview (Polo Estate)

1 - Hexagon bolt 10 mm AF

2 - Rubber ring

3 - Spacer

4 - Wiper motor
♦ Removing => Page 92-29

5 - Rubber ring

6 - Cover

7 - Hexagon nut 22 mm AF

satelettronica

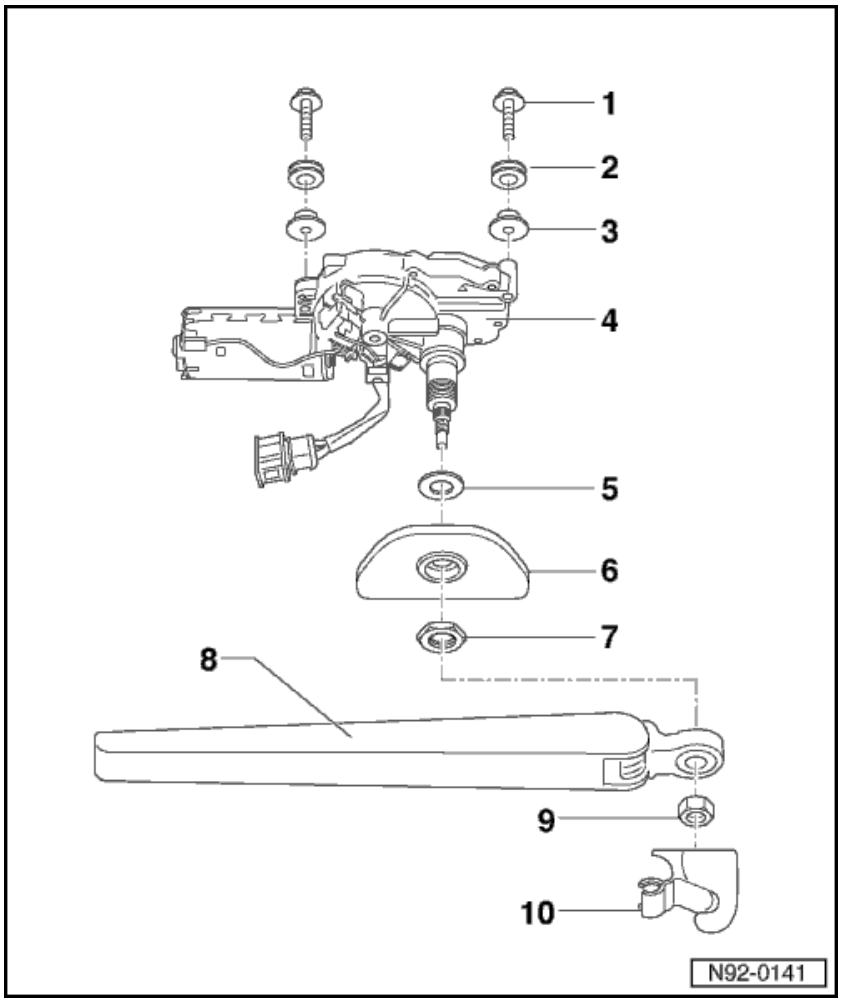

8 - Wiper arm

- Adjusting rest position => Page 92-24
- Removing and installing wiper blade rubber => Page 92-11

9 - Hexagon nut 13 mm AF

10 - Cover cap

Adjusting rear window wiper rest position

Special tools, testers, measuring instruments and auxiliary items required

- V.A.G 1331 Torque wrench (5 - 50 Nm)

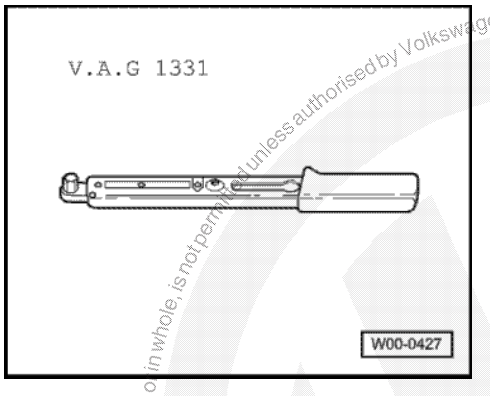

Caddy

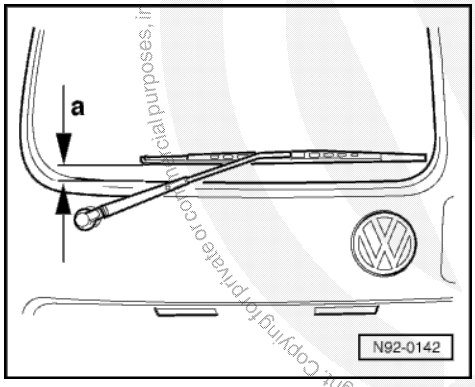

◀ The distance -a- between wiper blade and lower edge of window must be 15 mm.

- Adjust park position by moving wiper arm if necessary.
- Wiper arm tightening torque: 15 Nm

satelettronica

Polo Estate

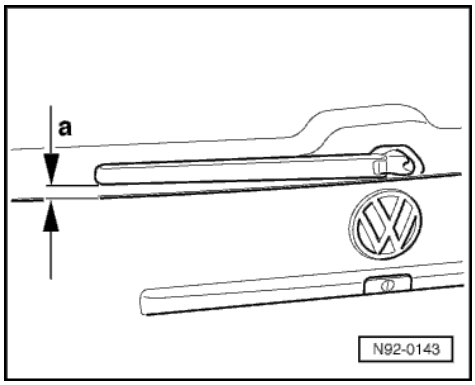

◀ The distance -a- between wiper blade and lower edge of window must be 25 mm.

- Adjust park position by moving wiper arm if necessary.
- Wiper arm tightening torque: 15 Nm

Adjusting washer jets

Special tools, testers, measuring instruments and auxiliary items required

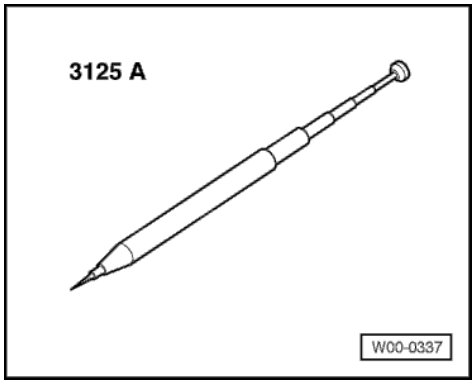

♦ 3125 A Washer jet adjusting tool

Notes:

♦ Renew spray jet (repair measure) if spray jet is irregular or cannot be adjusted to centre of wiped area.
♦ Never use a needle or similar object, as otherwise water passages in spray jets will be damaged!

- Check jet setting.

Rear window jet setting figures:

Spray jet must spray to centre of wiped area.

- Adjust jet with washer jet adjusting tool 3125 A if necessary.

Removing rear window wiper (Caddy)

Removing Polo Estate rear window wiper => Page 92-28.

Removing wiper arm

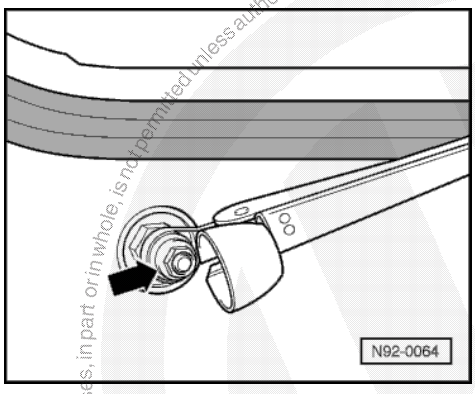

◀
- Open cover cap.
- Loosen 13 mm hexagon nut -arrow-.
- Fold up wiper arm and release from taper by moving arm sideways.

- Remove hexagon nut and take wiper arm off.

Removing rear flap trim

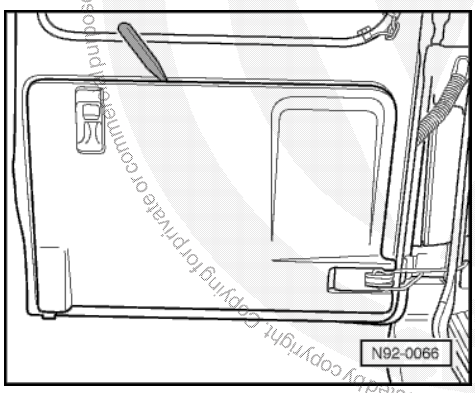

◀
- Carefully pull off trim completely.
- Do not damage plastic clips.

Protected by copyright. Copying for private or commercial purposes, in part or in whole, is not permitted unless authorised by Volkswagen AG. Volkswagen AG does not guarantee or accept any liability with respect to the correctness of information in this document. Copyright by Volkswagen AG.

satelettronica

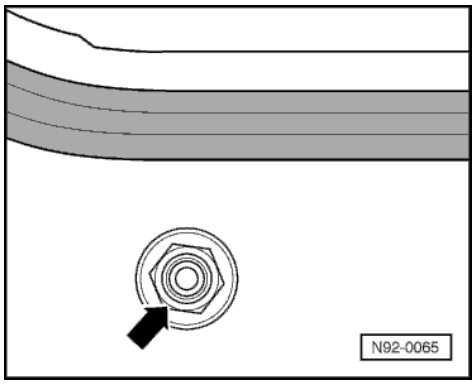

Removing rear wiper motor

◀ - Remove 22 mm AF hexagon nut -arrow-.
- Take off plastic washer and rubber ring.

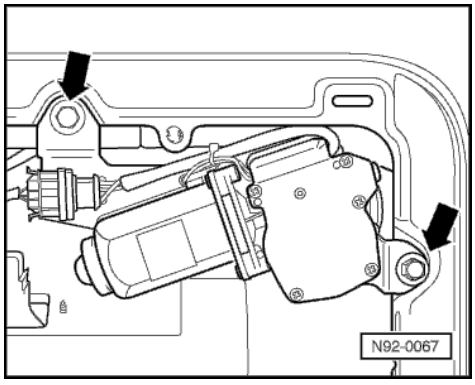

◀ - Pull connector off wiper motor.
- Unbolt 10 mm AF hexagon bolts -arrows- and remove wiper motor.

satelettronica

Protected by copyright. Copying for private or commercial purposes, in part or in whole, is not permitted unless authorised by Volkswagen AG. Volkswagen AG does not guarantee or accept any liability with respect to the correctness of information in this document. Copyright by Volkswagen AG.

Removing rear window wiper (Polo Estate)

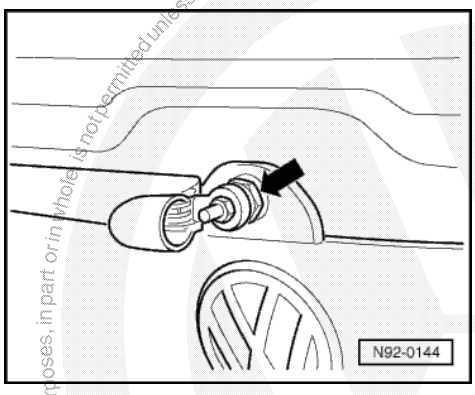

Removing wiper arm

◀ - Open cover cap.
- Loosen 13 mm hexagon nut -arrow-.
- Fold up wiper arm and release from taper by moving arm sideways.
- Remove hexagon nut and take wiper arm off.

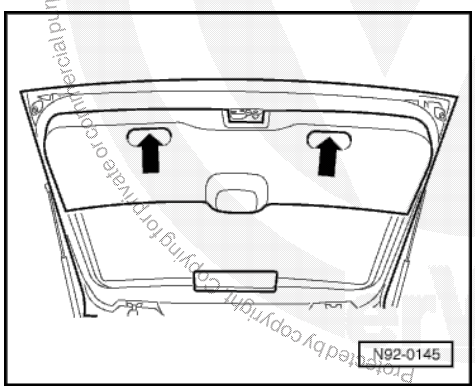

Removing rear flap trim

◀ - Remove cross-head screws (in grip recess) -arrows-.
- Carefully pull trim off all round and take off.

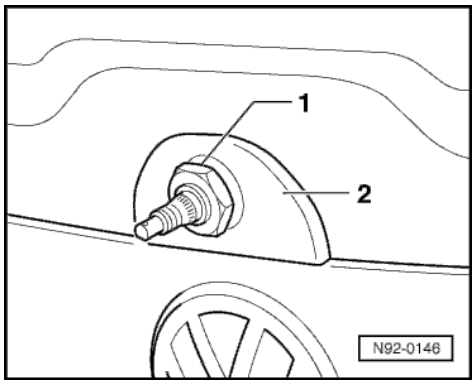

Removing rear wiper motor

◀ - Remove 22 mm AF hexagon nut -1- and take off cover -2-.

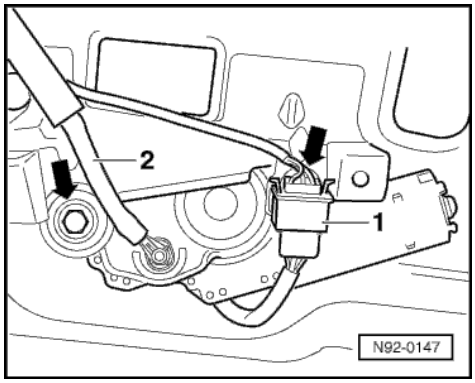

◀ - Pull connector -1- off wiper motor.
- Pull off hose -2- to spray jets.
- Remove 10 mm hexagon bolts -arrows- and remove wiper motor.

satelettronica

Protected by copyright. Copying for private or commercial purposes, in part or in whole, is not permitted unless authorised by Volkswagen AG. Volkswagen AG does not guarantee or accept any liability with respect to the correctness of information in this document. Copyright by Volkswagen AG.

Headlight

Assembly overview: Headlight

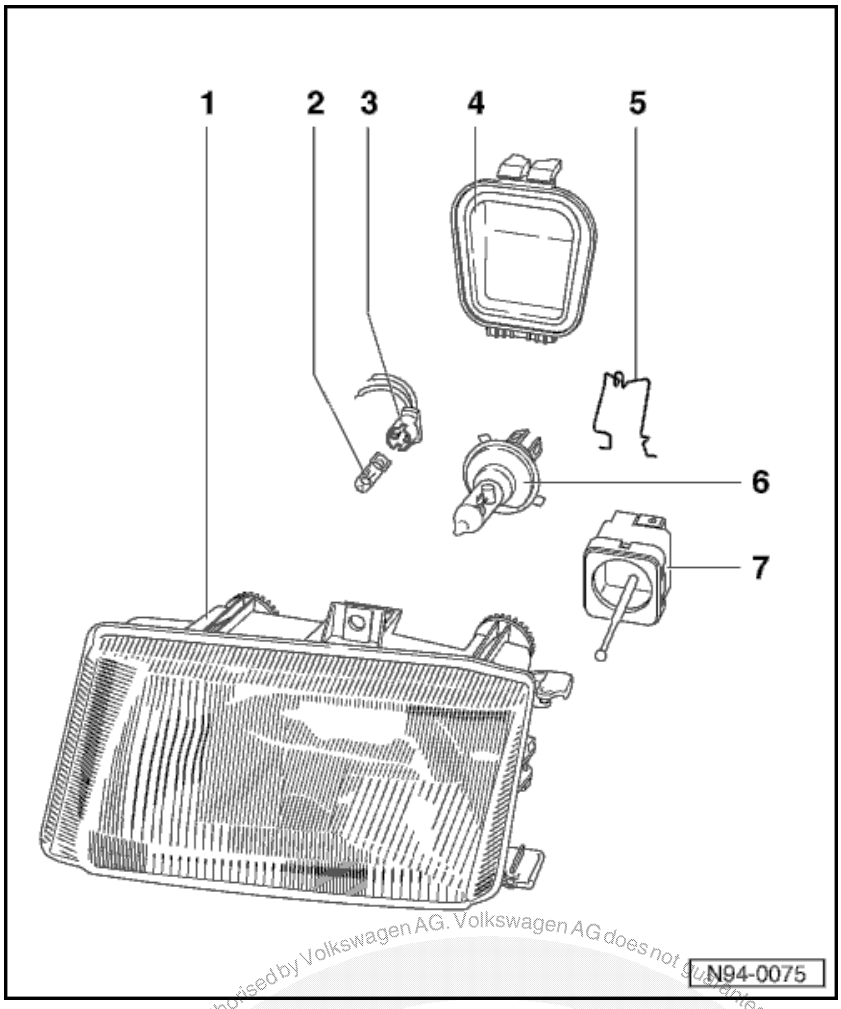

Warning!

Always disconnect the battery earth strap before working on the electrical system.

Note:

After any measures which could affect the headlight setting, the headlight setting must be checked and if necessary adjusted => Page 94-3.

1 - Headlight
- ♦ Checking headlight adjustment => Page 94-3
- ♦ Removing and installing => Page 94-4

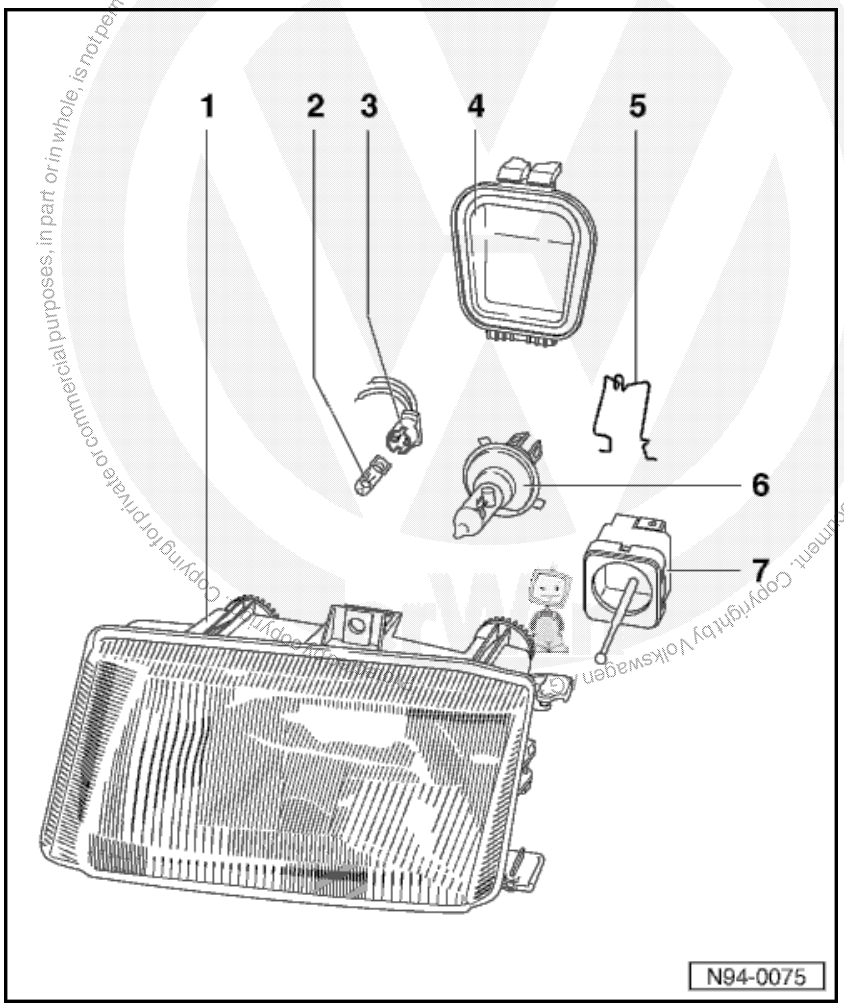

2 - Side light bulb
- Bulb 12 V, 4 W
- ♦ Renewing => Page 94-5

3 - Side light bulb holder

4 - Cap

5 - Spring clip

6 - Twin filament bulb for main and dipped beams
- Bulb H4 12 V, 60 W/55 W
- ♦ Renewing => Page 94-6

7 - Headlight beam range control positioning motor
- ♦ Removing and installing => Page 94-7

Copyright by Volkswagen AG. Volkswagen AG does not guarantee or accept any liability with respect to the correctness of information in this document. Copyright by Volkswagen AG. Copying for private or commercial purposes, in part or in whole, is not permitted unless authorised by Volkswagen AG.
satelettronica

Adjusting headlights

Notes:

For adjusting headlights, use a headlight adjusting appliance. The specifications can be found in Maintenance booklet.

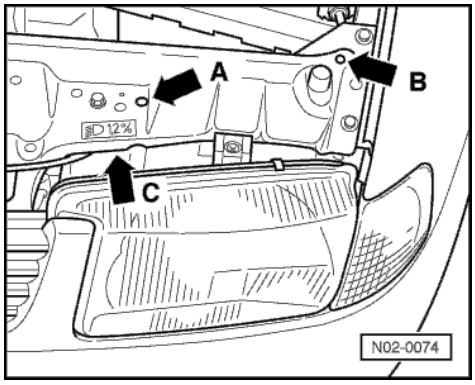

◀ Headlight (left):

- A - Lateral adjustment
- B - Height adjustment

- Adjust headlights, through holes -A- and -B-, using a suitable cross slotted screwdriver.

Both adjustment screws on right-hand headlight are a mirror image.

Note:

Please check also that both headlights move evenly when operating the headlight range control.

Protected by copyright. Copyright by Volkswagen AG. Volkswagen AG does not guarantee or accept any liability with respect to the correctness of information in this document. Copyright by Volkswagen AG. Reproduction of images, in part or in whole, is not permitted unless authorised by Volkswagen AG.

Removing and installing headlights

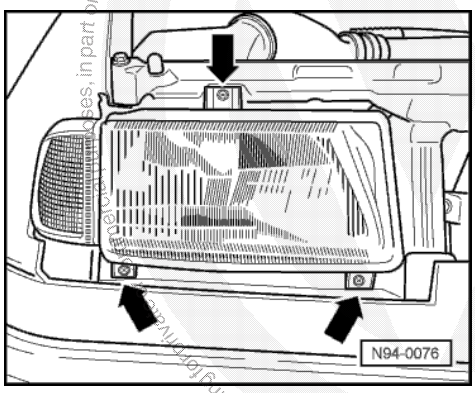

- Remove radiator grille and radiator grille trim.

- Disconnect headlight and turn signal multi - pin connector.
- Remove securing screws -arrows-.
- Pull headlight housing out forwards.

Installation is carried out in the reverse sequence.

- Check headlight settings => Page 94-3.

satelettronica

Replacing headlight bulb

Note:

Do not touch bulb glass when fitting a new bulb. Fingers leave traces of grease on the glass, which when switching bulb on, evaporate and cause the glass to cloud over.

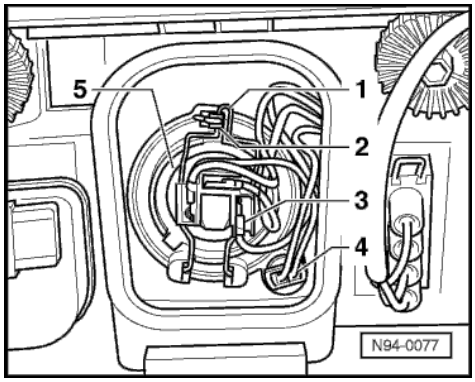

Replacing side light bulb

- Release cover on rear of headlight housing and remove.
- Pull holder -4- with bulb on connector out of the reflector.
- After changing bulb, push bulb with holder fully into the reflector.
- Install cover on rear of headlight housing.
- After installing a new bulb check function of headlight.

Protected by copyright. Copying for private or in whole, is not permitted unless authorised by Volkswagen AG. Volkswagen AG does not guarantee or accept any liability with respect to the correctness of information. Copyright by Volkswagen AG.

satelettronica

Renewing dip and main beam bulb

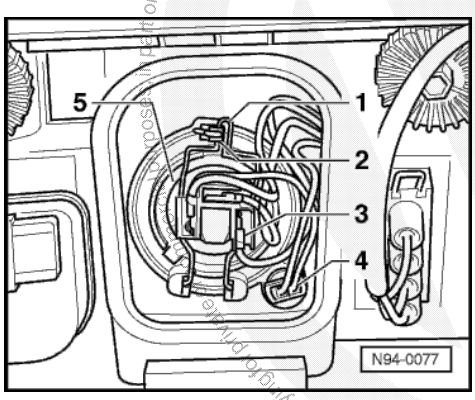

- Release cover on rear of headlight housing and remove.
- Pull connector -3- off twin-filament bulb.
- Push spring retaining clip -1- over the lugs -2- and allow to hang down.
- Pull twin-filament bulb -5- out of reflector.
- Do not touch bulb glass when installing new bulb.
- Insert new bulb so that the lugs on the laminated plate align with the grooves in the reflector.
- Install cover on rear of headlight housing.
- After installing a new bulb check function of headlight.

Removing and installing headlight range control positioning motor

Notes:

- ♦ The positioning motor can only be removed and installed when the headlight housing has been removed.
- ♦ If positioning motors are removed and installed or renewed, always carry out the headlight basic setting with headlight adjusting equipment. Angle setting is embossed on headlight housing.

Removing:

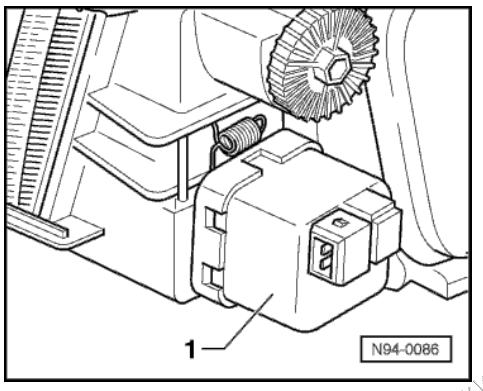

- Remove headlight => Page 94-4.
- Release cover on rear of headlight housing and remove.
- Disconnect headlight range control positioning motor connector.
- Release left-hand positioning motor by turning to left and right-hand by turning to right.
- Pull positioning shaft ball head out of location in reflector with a firm pull.

Installing:

- Push positioning motor into the ball head retainer on reflector until positioning shaft engages with reflector.
- Lock positioning motor in fitting position by turning.
- Fit sealing cover.
- Install headlight => Page 94-4.

- Check headlight settings => Page 94-3.

Front fog lights

Removing and installing fog lights

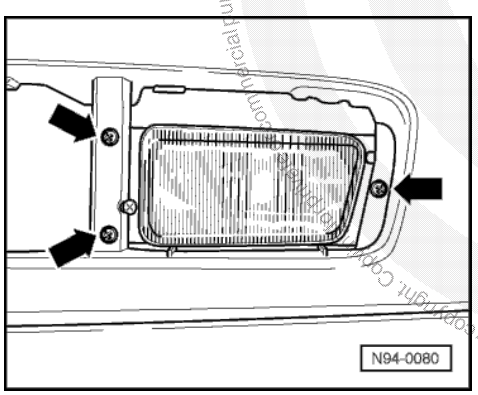

- Remove skirt

=> General body repairs; Repair group 50; Body front

- Remove securing screws -arrows-
- Pull foglight housing out to rear of bumper and disconnect connector.

Installation is carried out in the reverse sequence.

- Check headlight settings.

=> Maintenance

Protected by copyright. Copyright by Volkswagen AG. Volkswagen AG does not guarantee or accept any liability with respect to the correctness of information in this document. Copyright by Volkswagen AG. Reproduction for commercial purposes, in part or in whole, is not permitted unless authorised by Volkswagen AG.
satelettronica

Removing and installing foglight bulb

Note:

Do not touch bulb glass when fitting a new bulb. Fingers leave traces of grease on the glass, which when switching bulb on, evaporate and cause the glass to cloud over.

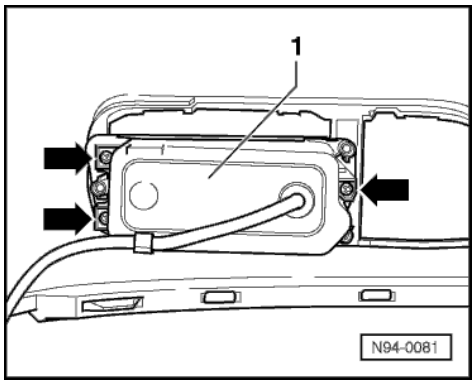

◀ - Remove securing screws -arrows- and take off cover -1-.

satelettronica

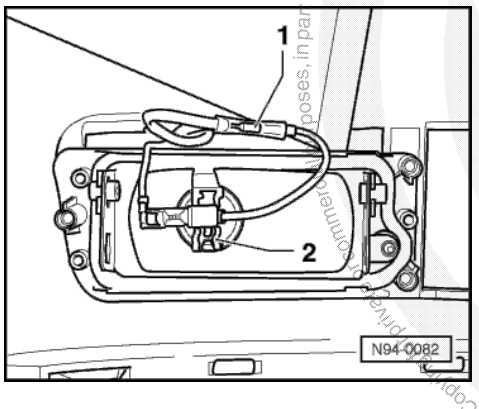

◀ - Separate connector - 1 - of H3 halogen bulb (12V/55W) in the cover cap.
- Press spring clip -2- over the lug and swing out.
- Pull bulb out of housing.

Installation is carried out in the reverse sequence but note the following:

- Insert bulb so that the recess in the bulb holder aligns with housing guide lug.
- After installing a new bulb check headlight settings.

=> Maintenance

Front turn signals

Protected by copyright. Copyright by Volkswagen AG. Volkswagen AG does not guarantee or accept any liability with respect to the correctness of information in this document. Copyright by Volkswagen AG. Protected by copyright. Copying for private or commercial purposes, in part or in whole, is not permitted unless authorised by Volkswagen AG.

Removing and installing front turn signals

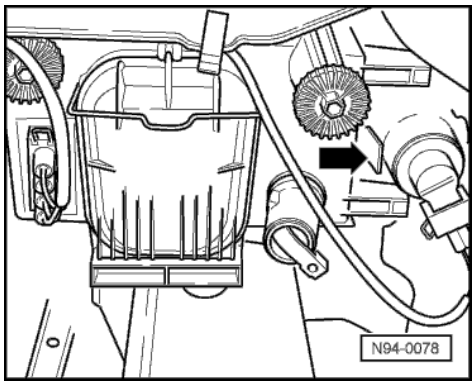

Removing:

- Press locating lug -arrow- outwards.
- Pull turn signal out forwards.
- Disconnect connector.

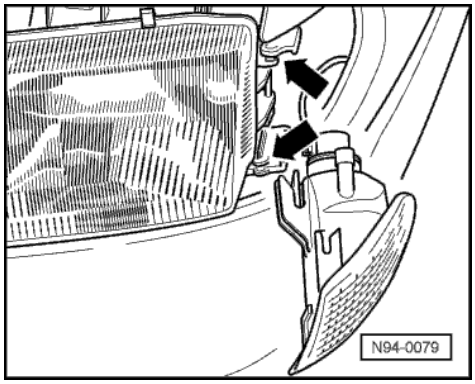

Installing:

- Connect connector.
- Slide turn signal into the wing cut-out until it locates.

Note:

The turn signal tabs must locate in the guides -arrows- of the headlight housing.

Volkswagen AG. Volkswagen AG does not guarantee or accept any liability with respect to the correctness of information in this document. Copyright by Volkswagen AG.
Printed by copyright holder. Copying for private or commercial purposes, in part or in whole, is not permitted unless authorised by Volkswagen AG.

Replacing turn signal bulb

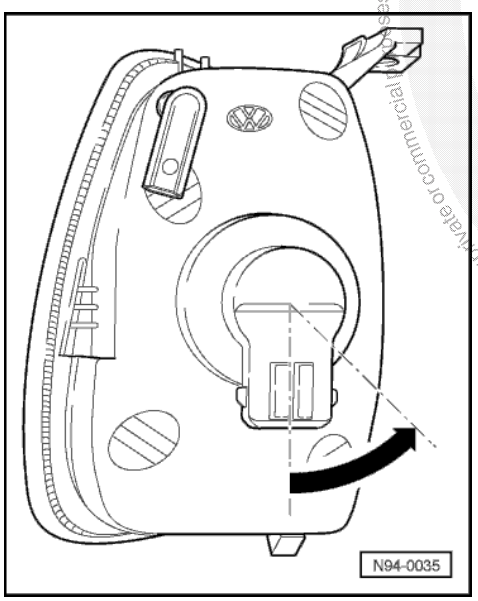

Removing:

- Turn bulb holder in direction of arrow and pull out from housing.
- Remove bulb from the holder.

Installing:

Installation is carried out in the reverse sequence.

Note:

Do not touch bulb glass when fitting a new bulb. Fingers leave traces of grease on the glass, which when switching bulb on, evaporate and cause the glass to cloud over.

When installing, ensure that the bulb holder engages in the housing by turning in opposite direction to direction of arrow.

satelettronica

Side mounted turn signals

Removing and installing side mounted turn signals

Removing:

Note:

Extreme caution must be used when removing the side turn signal as it is only possible to be removed in one direction and it is not possible to recognise which side of the turn signal the spring clip or the mounting sits.

When using force to remove the light on the spring clip side there is a great danger that the turn signal or the vehicle paintwork surface will be damaged.

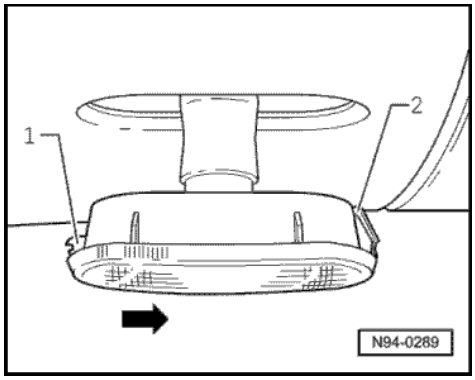

- Press turn signal with a suitable tool on the mounting position side -1- carefully in direction of arrow against the force of the spring clip -2- on the opposite side and lever out (protect paintwork surface with adhesive tape first if necessary).
- Pull rubber holder with push - fit bulb off bulb housing.
- Pull push - fit bulb (12 V/5 W) out of housing (do not turn).

Installing:

- Fit rubber holder with push - fit bulb onto bulb housing.
- Insert turn signal in wing.
- After installing a new bulb check function of turn signals.

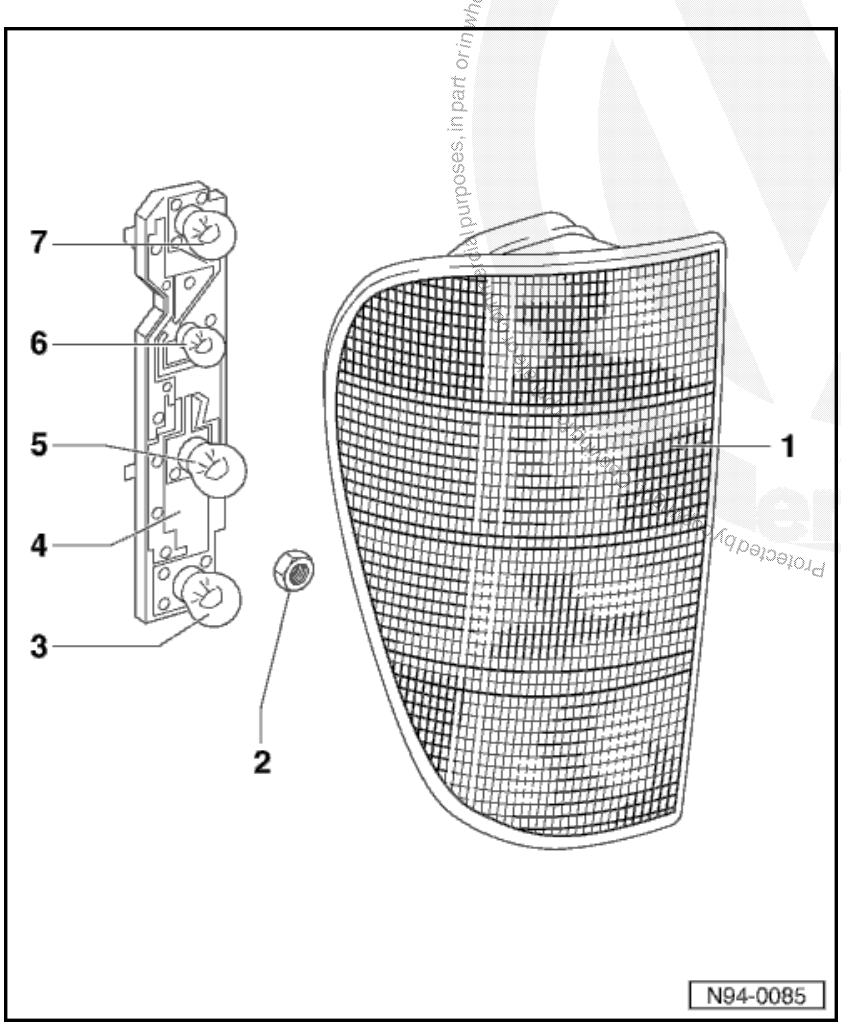

Tail lights

Rear lights Caddy assembly overview

Warning!

Always disconnect the battery earth strap before working on the electrical system.

1 - Housing

2 - Hexagon nut M5

3 - Rear fog light bulb
- 12V / 21W
  - ♦ For right - hand rear lights, reversing light bulb 12V / 21W

4 - Bulb holder
  - ♦ Removing =>Page 94-20

5 - Turn signal bulb
- 12V / 21W

satelettronica

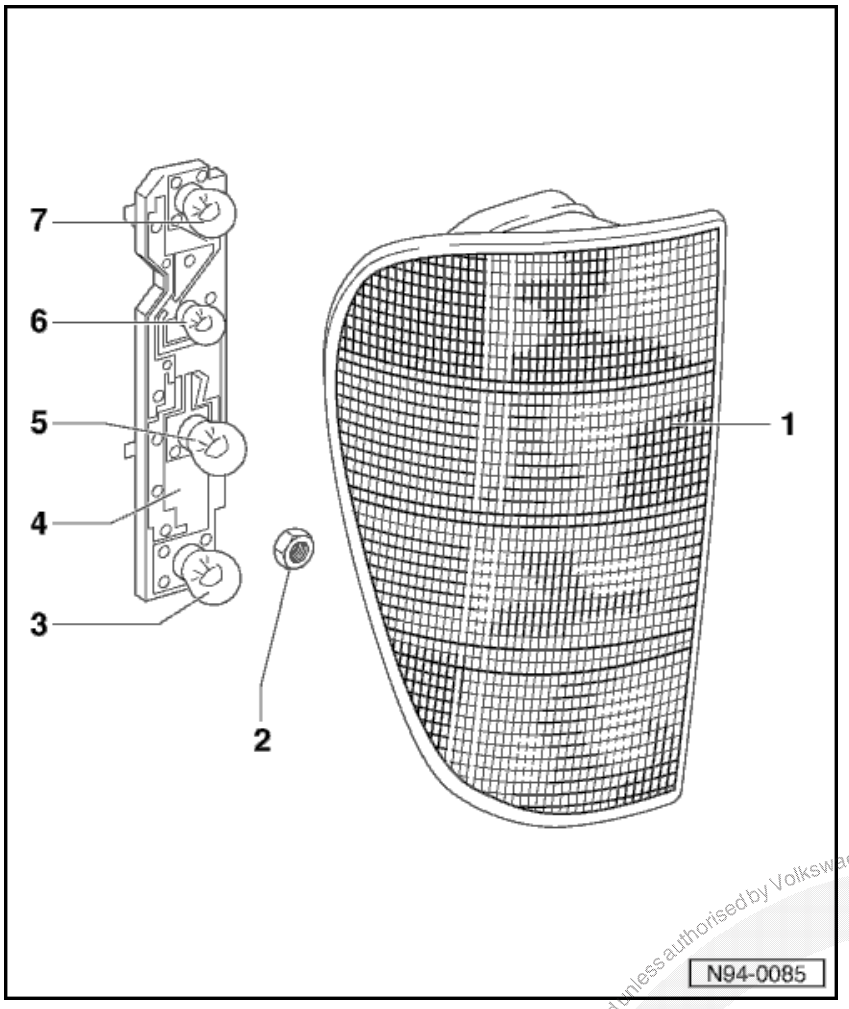

6 - Tail light bulb
- 12V / 5W

7 - Brake light bulb
- 12V / 21W

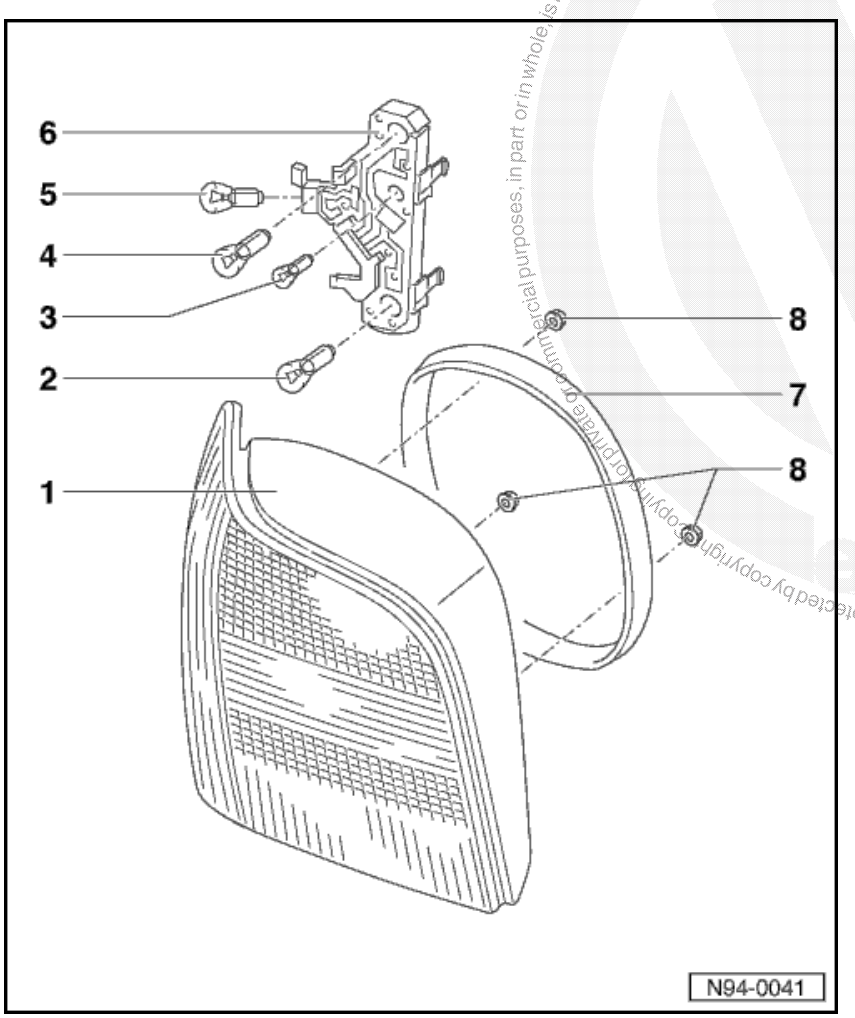

Removing and installing rear lights Polo Classic

Warning!

Always disconnect the battery earth strap before working on the electrical system.

1 - Housing

2 - Rear fog light bulb
- 12V / 21W
  - ♦ For right-hand rear lights, reversing light bulb 12V / 21W

3 - Tail light bulb
- 12V / 5W

4 - Brake light bulb
- 12V / 21W

Protected by copyright. Copyright by Volkswagen AG. Volkswagen AG does not guarantee or accept any liability with respect to the correctness of information in this document. Copying for private or commercial purposes, in part or in whole, is not permitted unless authorised by Volkswagen AG.
satelettronica

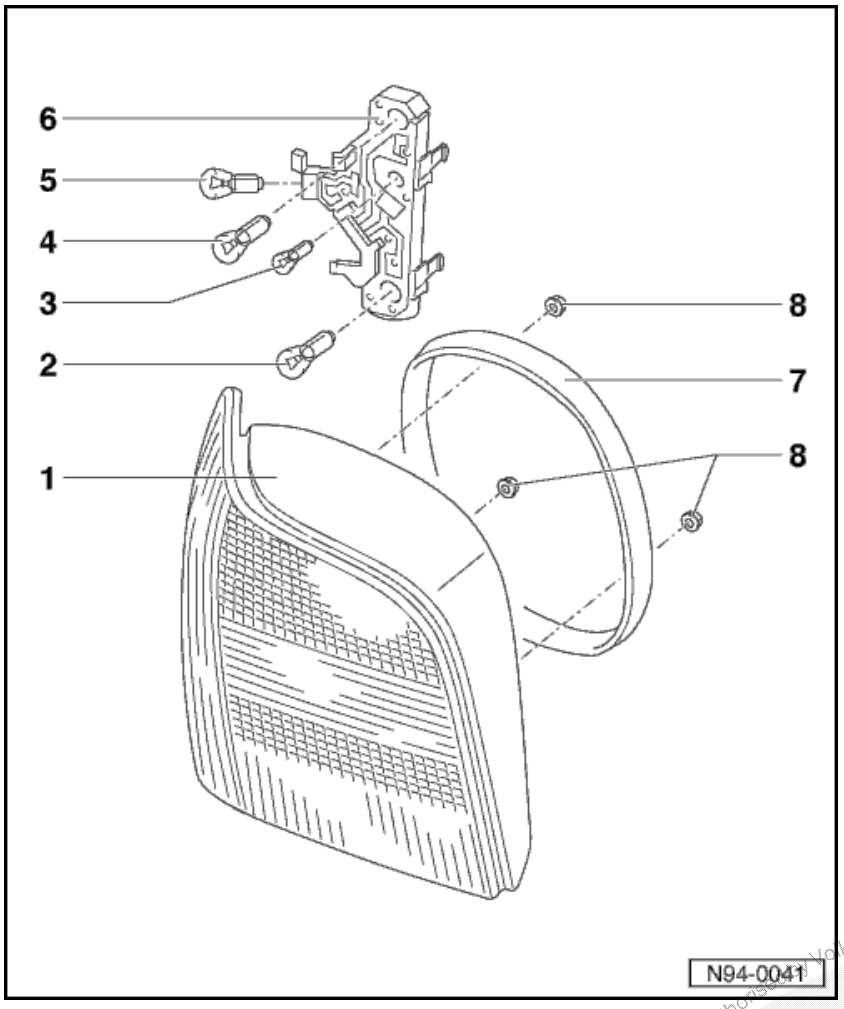

5 - Turn signal bulb
- 12V / 21W

6 - Bulb holder
♦ Removing =>Page 94-22

7 - Gasket

8 - Hexagon nut M5

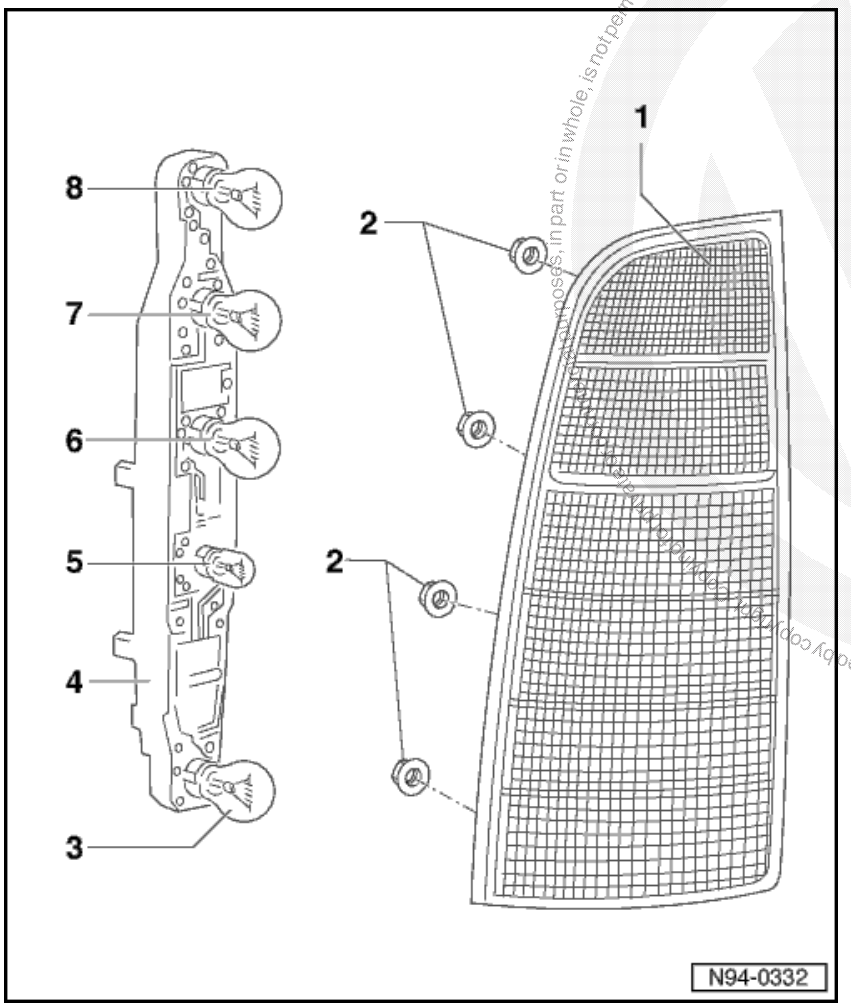

Removing and installing rear lights Polo Estate

Warning!

Always disconnect the battery earth strap before working on the electrical system.

1 - Housing

2 - Hexagon nuts M5

3 - Rear fog light bulb
♦ Vacant on right - hand rear lights

4 - Bulb holder
♦ Removing =>Page 94-20

5 - Tail light bulb
- 12V / 5W

satelettronica

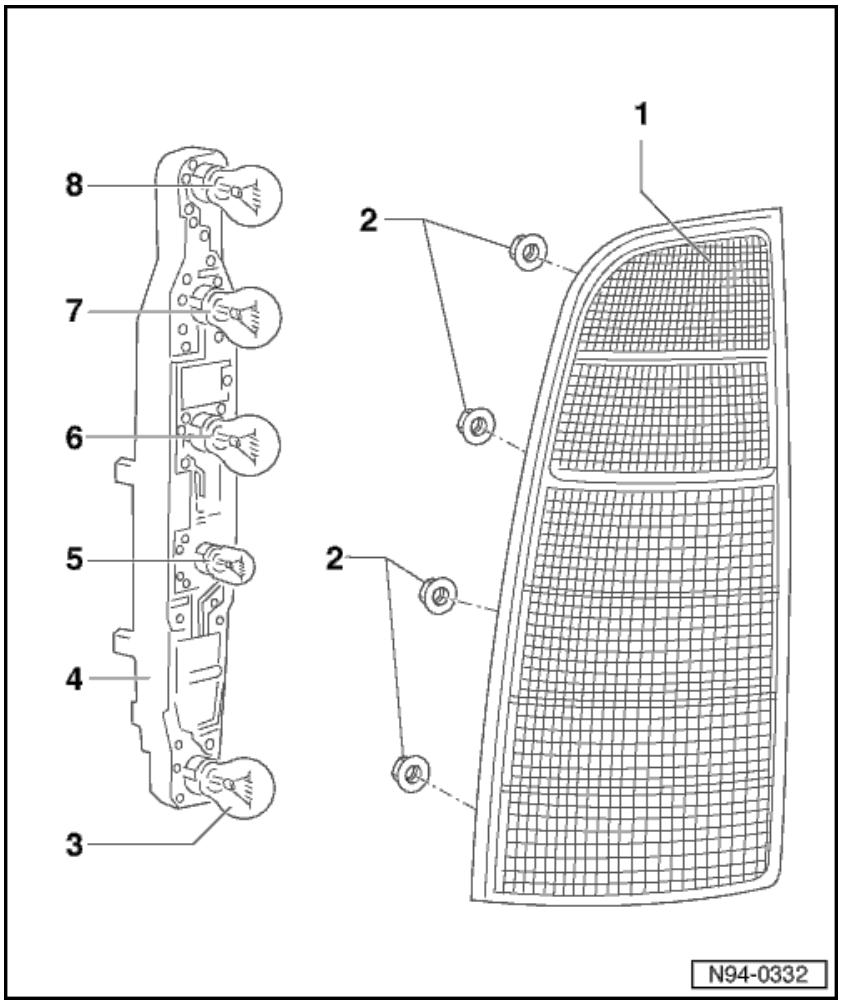

6 - Twin filament bulb for brake and tail light
- 12V / 21W/5W

7 - Reversing light bulb
- 12V / 21W

8 - Turn signal bulb
- 12V / 21W

satelettronica

Protected by copyright. Copying for private or commercial purposes, in part or in whole, is not permitted unless authorised by Volkswagen AG. Volkswagen AG does not guarantee or accept any liability with respect to the correctness of information in this document. Copyright by Volkswagen AG.

Removing and installing tail light bulb holder Caddy

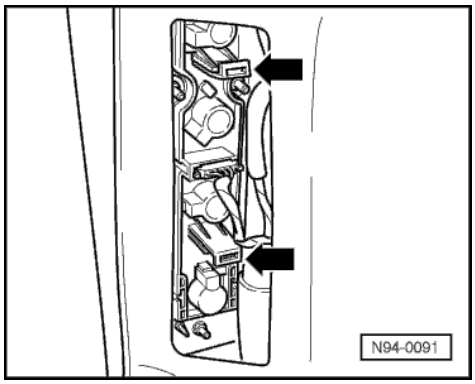

◀ **Removing:**

- Release retainers -arrows- and remove bulb holder.
- Disconnect connector.

Installing:

Install in reverse order.

Removing and installing tail light bulb holder Polo Estate

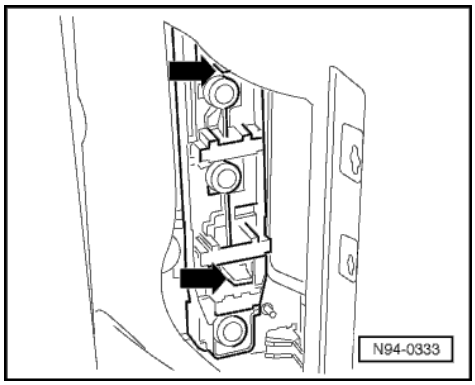

Removing:

- Release retainers -arrows- and remove bulb holder.
- Disconnect connector.

Installing:

Install in reverse order.

Removing and installing tail light bulb holder Polo Classic

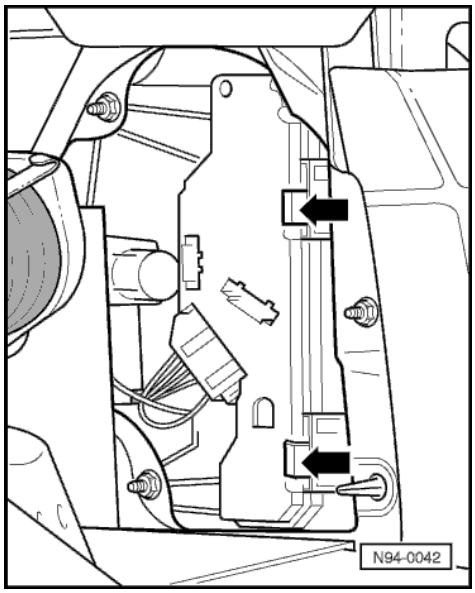

Removing:

- Release retainers -arrows- and remove bulb holder.
- Disconnect connector.

Installing:

Install in reverse order.

satelettronica

Protected by copyright. Copying for private or commercial purposes, in part or in whole, is not permitted unless authorised by Volkswagen AG. Volkswagen AG does not guarantee or accept any liability with respect to the correctness of information in this document. Copyright by Volkswagen AG.

Additional brake light

Removing and installing additional brake light Polo Classic

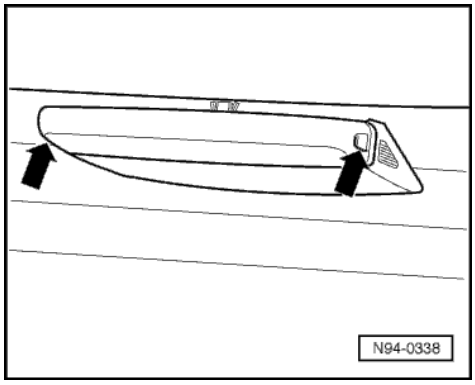

The additional brake light is secured to the rear window.

Removing and installing bulb holder

◀ - Pull off connector, press retaining springs back and take out bulb holder.

Install in reverse order.

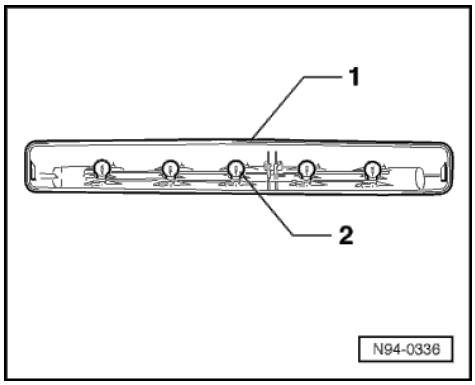

Changing bulbs

◀ - The bulbs (12V/5W) -2- are a push fit. They can be pulled out of and pushed into the bulb holder -1-.

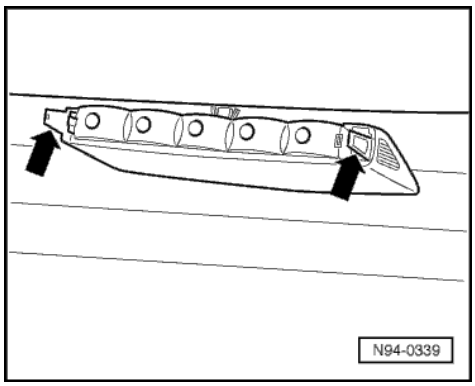

Removing and installing additional brake light housing

◀ - Press retaining springs -arrows- back and take housing with lens off rear window.

Install in reverse order.

Removing and installing additional brake light Polo Estate

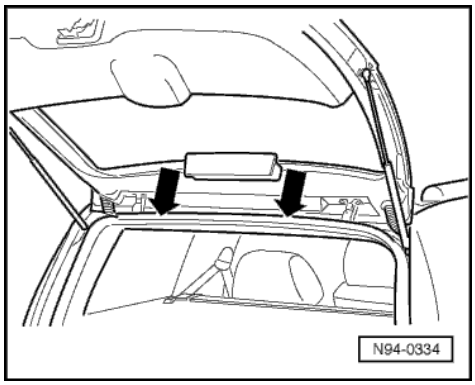

The additional brake light is secured to the tailgate.

Removing and installing bulb holder

◀ - Unclip -arrows- lower half of additional brake light housing downwards and fold away.

satelettronica

Protected by copyright. Copying for private or commercial purposes, in part or in whole, is not permitted unless authorised by Volkswagen AG. Volkswagen AG does not guarantee or accept any liability with respect to the correctness of information in this document. Copyright by Volkswagen AG.

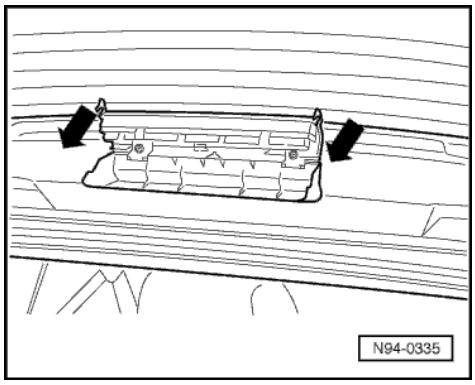

- Pull off connector and unclip bulb holder to rear -arrows-.

Note:

On the bulb holder there is a circuit board with 32 soldered LED's which are covered by a plastic strip.

Changing an individual LED is not possible, the bulb holder must be renewed complete in cases of repair.

Install in reverse order.

Removing and installing additional brake light housing

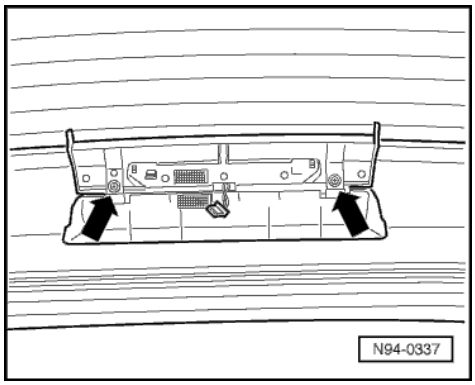

- Unscrew securing screws -arrows- and remove additional brake light.

Install in reverse order.

Number plate lights

Removing and installing number plate light Polo Classic

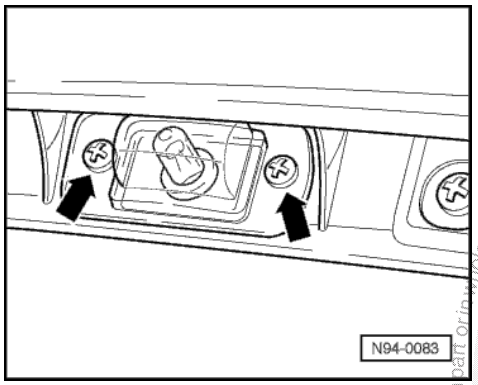

Removing:

- Unscrew securing screws -arrows- for number plate light.
- Pull number plate light out.
- Disconnect connector.

Installing:

Install in reverse order.

Removing and installing number plate light bulb

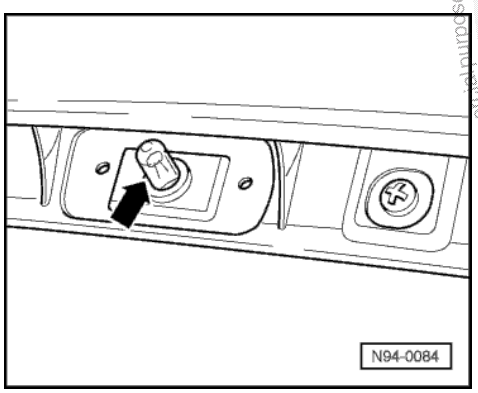

- Remove number plate light.
- Pull out glass base bulb -arrow- (12V/5W), do not turn.
- Push in new bulb, fit cover and tighten securing screws.

satelettronica
Protected by copyright. Copyright by Volkswagen AG. Volkswagen AG does not guarantee or accept any liability with respect to the correctness of information in this document. Copying for private or commercial purposes, in part or in whole, is not permitted unless authorised by Volkswagen AG.

Removing and installing number plate light Caddy

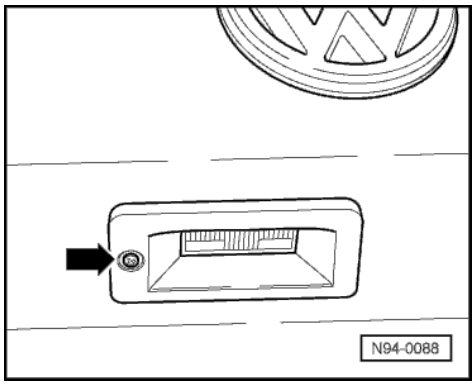

Removing:

- Unscrew securing screw -arrow- for number plate light.
- Pull number plate light out.
- Disconnect connector.

Installing:

Install in reverse order.

Removing and installing number plate light bulb

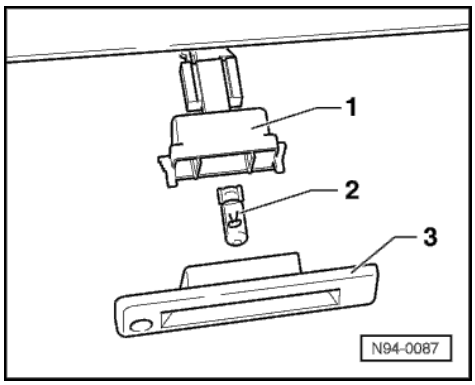

- Remove number plate light.
- Pull cover -3- off housing -1-.
- Pull out glass base bulb (12V/5W) -2-, do not turn.
- Push in new bulb, fit cover and tighten securing screw.

Removing and installing number plate light Polo Estate

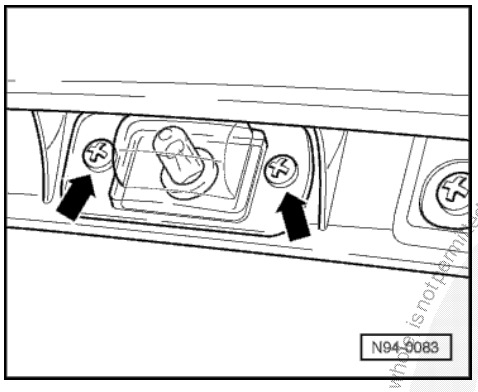

Removing:

- Unscrew securing screws -arrows- for number plate light.
- Pull number plate light out.
- Disconnect connector.

Installing:

Install in reverse order.

Removing and installing number plate light bulb

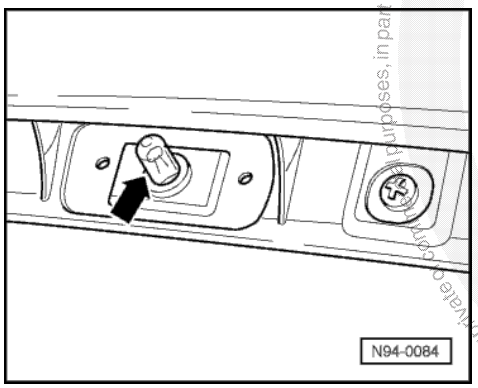

- Remove number plate light.
- Pull out glass base bulb -arrow (12V/5W), do not turn.
- Push in new bulb, fit cover and tighten securing screws.

satelettronica
Protected by copyright. Copying for private or commercial purposes, in part or in whole, is not permitted unless authorised by Volkswagen AG. Volkswagen AG does not guarantee or accept any liability with respect to the correctness of information in this document. Copyright by Volkswagen AG.

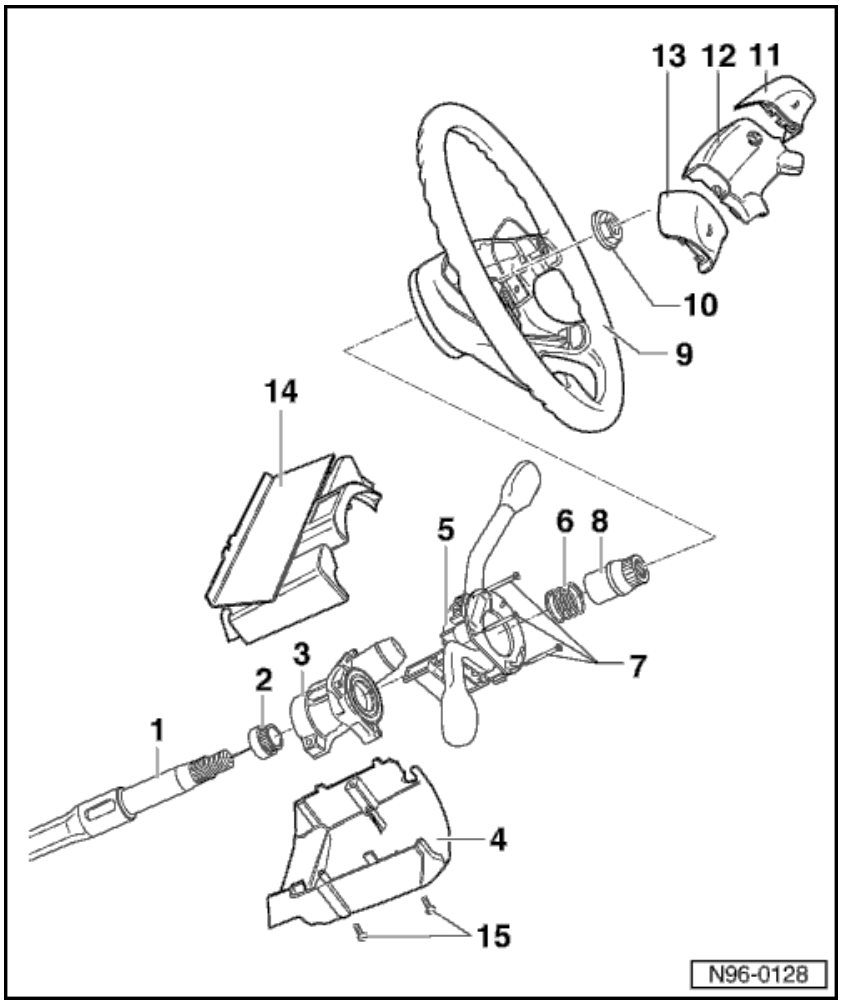

Steering column switch and starter/ignition switch

Steering column assembly overview

Warning!

Always disconnect the battery earth strap before working on the electrical system.

Notes:

- Further information on assembling steering column

=> Running gear, axles, steering; Repair group 48; Steering; Airbag, steering wheel, steering column

- Assembly instructions for vehicles with airbag

=> General body repairs, interior; Repair group 69; Interior protection; Airbag

1 - Steering column

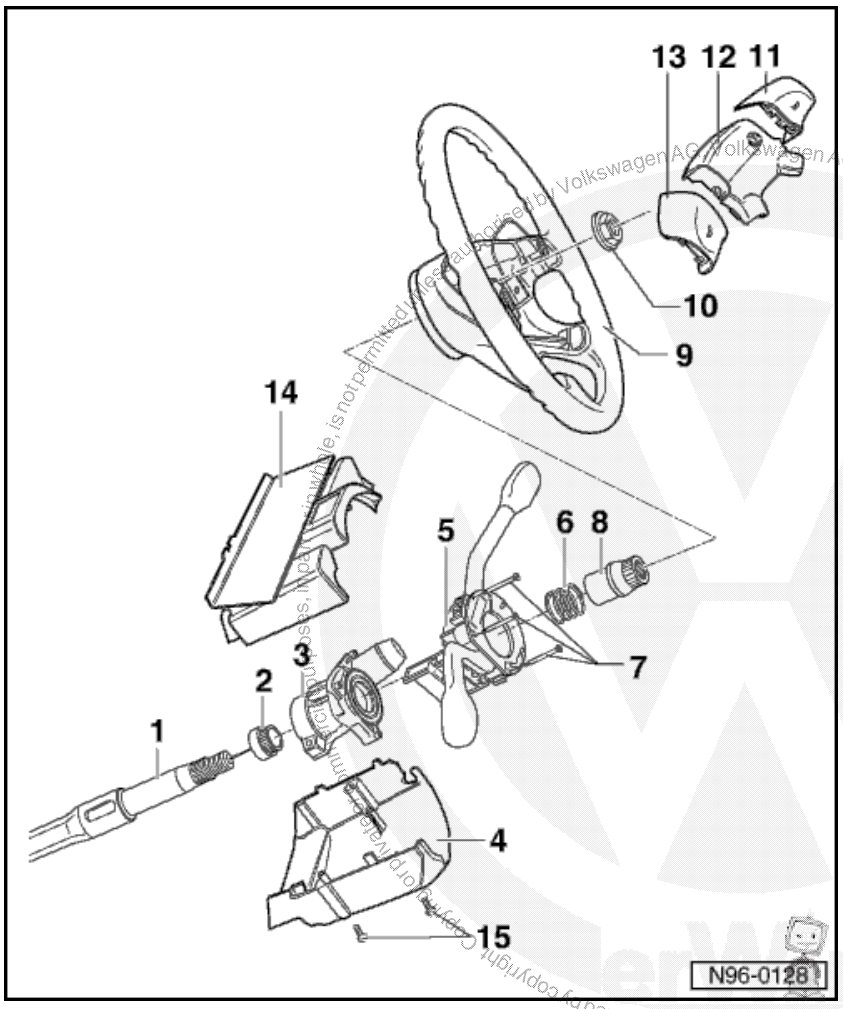

2 - Support ring

3 - Steering lock housing

- Removing and installing => Page 94-38
- Removing and installing lock cylinder => Page 94-38

4 - Trim - lower part

5 - Steering column switch

- For turn signals, main and dip beam, headlight flasher, parking lights, windscreen wiper, wash/wipe controls and rear window wiper
- Removing => Page 94-34, Removing and installing steering column switch

satelettronica

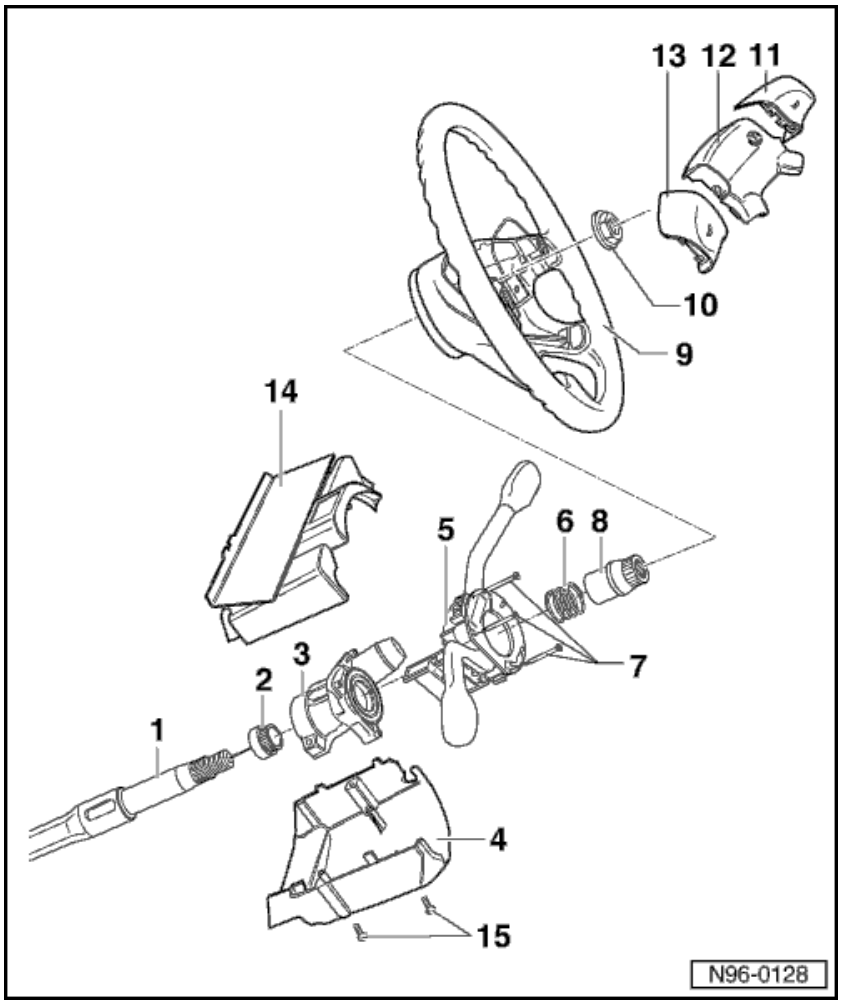

6 - Spring

7 - Steering column switch securing screws

8 - Splined adapter sleeve

9 - Steering wheel
- ♦ Grease slip ring for horn operation => Page 94-33, Fig.3

10 - Hexagon nut
- ♦ 50 Nm

11 - Right-hand horn push
- ♦ Removing horn push => Page 94-32, Fig. 1

12 - Airbag unit
- ♦ Removing and installing

=> General body repairs, interior; Repair group 69; Interior protection; Airbag

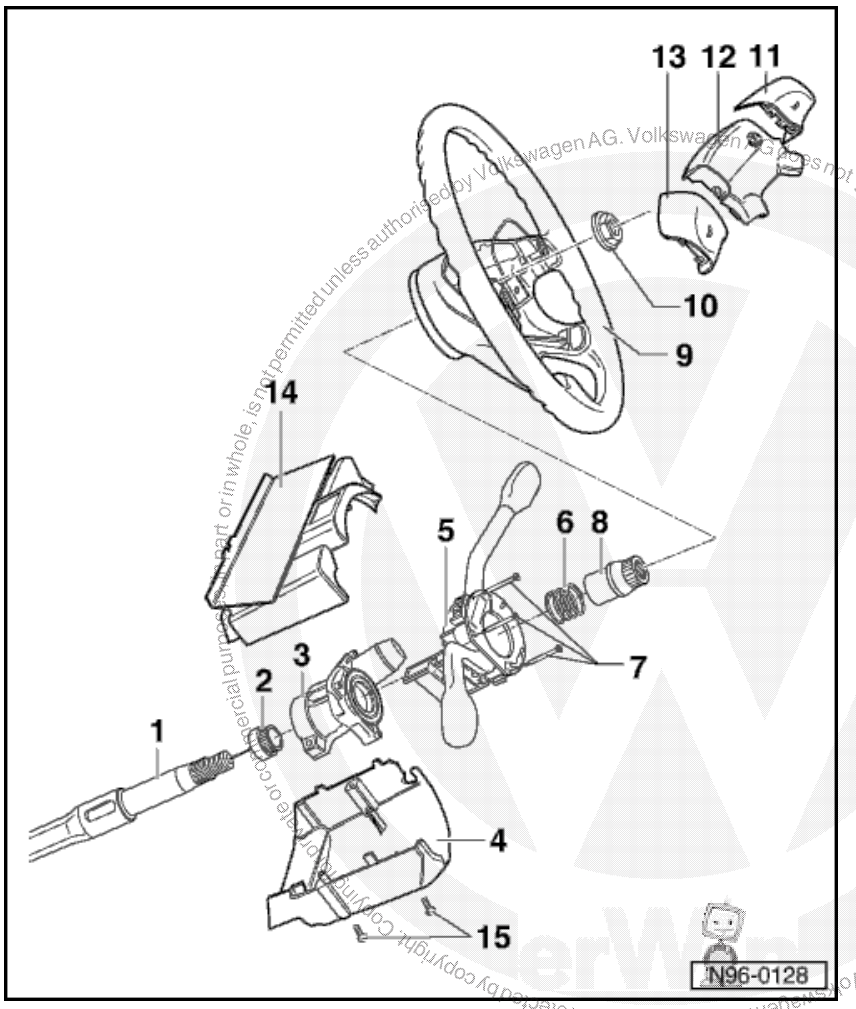

13 - Left-hand horn push
- ♦ Removing horn push => Page 94-32, Fig.1

14 - Trim - upper part

15 - Steering screws for trim upper and lower parts

satelettronica

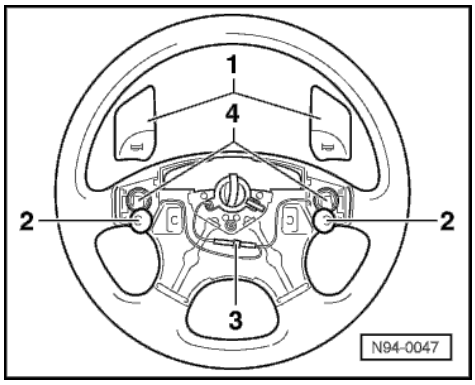

Fig.1 Removing and installing horn pushes steering wheel with airbag unit

◀
- 1 -Horn pushes
- 2 -Contact discs
- 3 -Wiring connector
- 4 -Springs

To gain access to the wiring connector, the airbag unit must be removed

=> General body repairs, interior; Repair group 69; Airbag

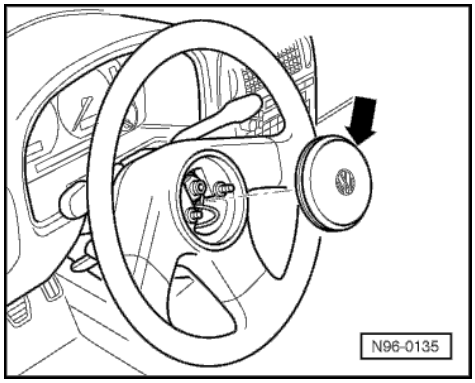

Fig. 2 Removing horn push steering wheel without airbag unit

◀
- Lever up horn push with contact -arrow- at bottom and pull off steering wheel.

Fig.3 Slip ring for horn operation

◀
- Grease slip ring -arrow- with G 000 400 grease.

Removing and installing steering column switch

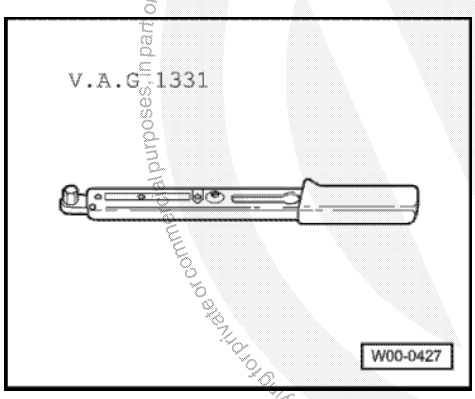

Special tools, testers, measuring instruments and auxiliary items required

♦ V.A.G 1331 Torque wrench (5 - 50 Nm)

Removing steering column switch

> **Warning!**
>
> **Before working on the electrical system disconnect the battery earth strap.**

Notes:

♦ If the vehicle has a security-coded radio, obtain the correct anti-theft code number before disconnecting the battery.

Protected by copyright. Copying for private or commercial purposes, in part or in whole, is not permitted unless authorised by Volkswagen AG. Volkswagen AG does not guarantee or accept any liability with respect to the correctness of information in this document. Copyright by Volkswagen AG.

satelettronica

♦ When the battery is reconnected, check operation of electrical equipment (radio, clock and electric window lifters) according to Workshop Manual or Owner's Manual.

- Remove driver's airbag.

=> General body repairs, interior; Repair group 69; Interior protection; Airbag

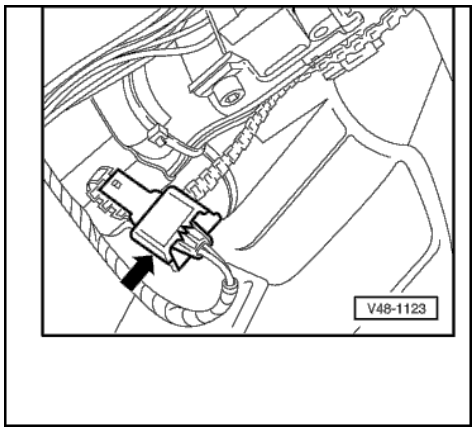

- Take off lower steering column switch trim.
- Separate connector -arrow- from resetting unit.
- Pull connector off steering lock housing.

- Remove hexagon nut, align steering so that steering wheel is centred and pull steering wheel off steering column.
- Take off upper steering column switch trim.

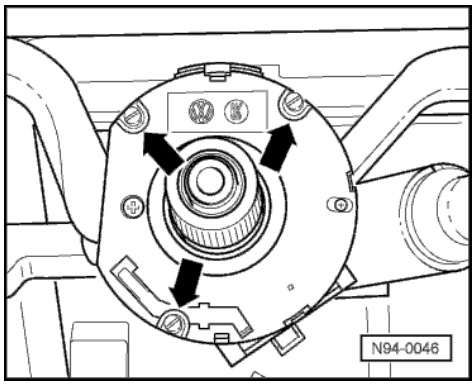

- Remove securing screws -arrows-.
- Separate connector to turn signal and windscreen wiper switch.
- Pull turn signal and windscreen wiper switch off the steering column.

Installing steering column switch

Install in reverse order.

- Install driver's side airbag.

=> General body repairs; Repair group 69

Wiring connections on steering column switches

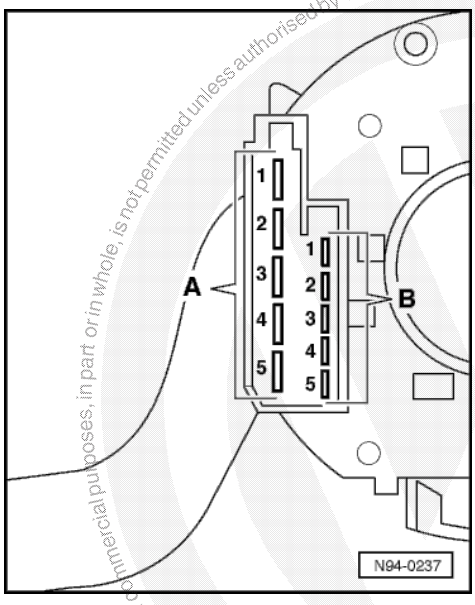

A - Connector, 5 pin

- 1 -Vacant
- 2 -Switch for dip/flasher - terminal 56b
- 3 -Switch for dip/flasher - terminal 56
- 4 -Switch for dip/flasher - terminal 56a
- 5 -Switch for dip/flasher - terminal 30

B - Connector, 5 pin

- 1 -Windscreen wiper switch - terminal 53b
- 2 -Windscreen wiper switch - terminal 53a
- 3 -Windscreen wiper switch - terminal 53
- 4 -Windscreen wiper switch - terminal 53e
- 5 -Windscreen wiper switch - intermittent operation

Protected by copyright. Copying for private or commercial purposes, in part or in whole, is not permitted unless authorised by Volkswagen AG. Volkswagen AG does not guarantee or accept any liability with respect to the correctness of information in this document. Copyright by Volkswagen AG.

satelettronica

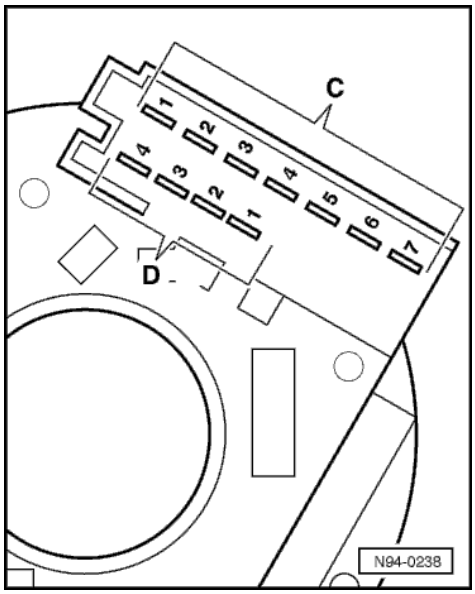

C - Connector, 7 pin

- 1 -Horn plate - terminal 71
- 2 -Turn signal switch - terminal 49a
- 3 -Turn signal switch - terminal L
- 4 -Parking light switch - terminal PL
- 5 -Parking light switch - terminal P
- 6 -Parking light switch - terminal PR
- 7 -Turn signal switch - terminal R

D - Connector, 4 pin

- 1 -Windscreen wiper switch - rear window wiper
- 2 -Windscreen wiper switch - flick operation
- 3 -Windscreen wiper switch - terminal 31
- 4 -Windscreen wiper switch - terminal 15, not used

satelettronica

Protected by copyright. Copying for private or commercial purposes, in part or in whole, is not permitted unless authorised by Volkswagen AG. Volkswagen AG does not guarantee or accept any liability with respect to correctness of information. Copyright by Volkswagen AG.

Removing and installing steering lock housing

Special tools, testers, measuring instruments and auxiliary items required

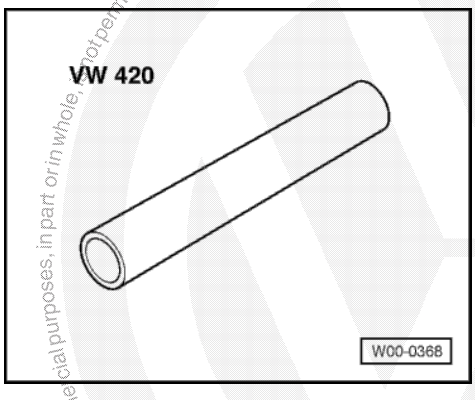

- VW 420 Tube
- Puller (e.g. Kukko 204/2)

Warning!

Before working on the electrical system disconnect the battery earth strap.

Notes:

- If the vehicle has a security-coded radio, obtain the correct anti-theft code number before disconnecting the battery.
- When the battery is reconnected, check operation of electrical equipment (radio, clock and electric window lifters) according to Workshop Manual or Owner's Manual.

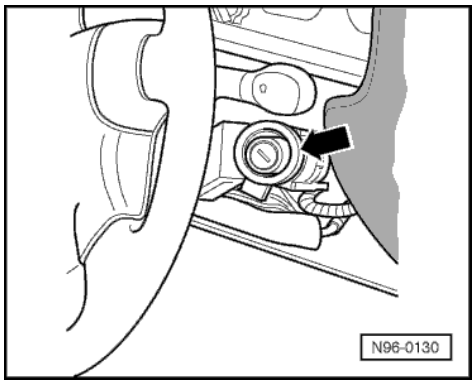

Removing steering lock housing

- Remove steering column switch => Page 94-34.

Vehicles with removable immobilizer reader coil:

◀ - Pull reader coil -arrow- off steering lock housing.

Vehicles with immobilizer reader coil securely attached to lock cylinder:

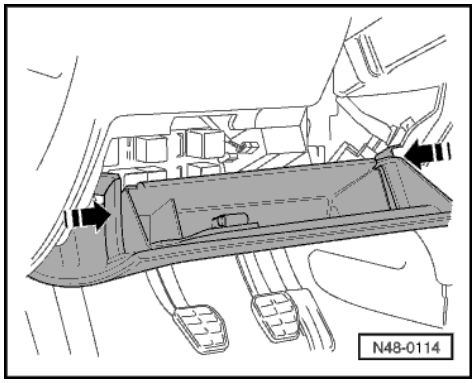

◀ - Press stowage compartment retaining lugs together in direction of arrows.
- Fold stowage compartment down and pull out to rear.

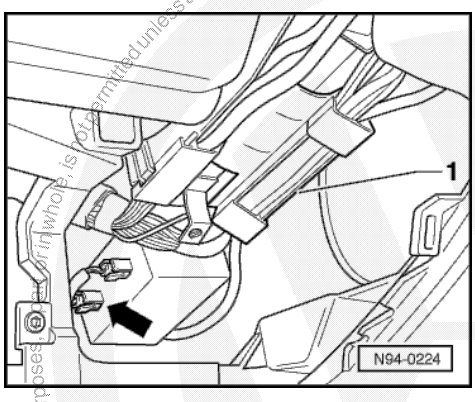

◀ - Pull immobilizer reader coil connector - arrow - carefully off immobilizer control unit.
- Take reader coil cable out from cable guide -1-.

Continued for all vehicles:

- Pull multi-pin connector off ignition/starter switch.

Vehicles with automatic gearbox

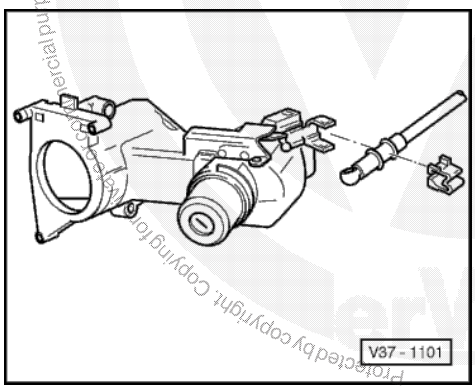

◀ - Pull clip off and unclip locking cable for ignition key removal lock.

satelettronica

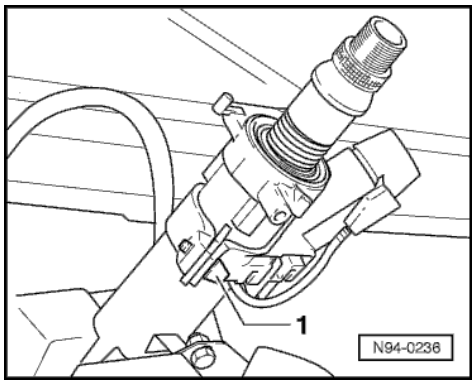

Continued for all vehicles:

- Drill out shear bolts -1- or chisel off if necessary.

Warning!

Wear protective goggles.

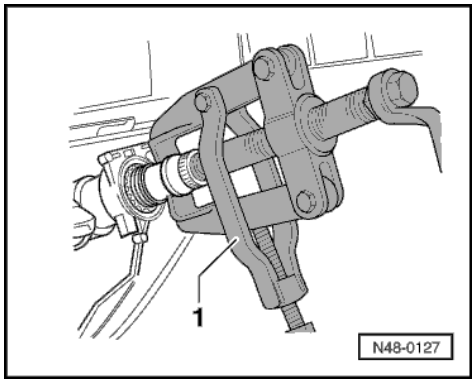

- Pull off spline adapter sleeve using commercially available puller -1- (e.g. B. Kukko 204/2).
- Pull steering lock housing and spring off column tube and steering column.

Installing steering lock housing

- Slide steering lock housing and spring onto steering column (note installation position).

satelettronica

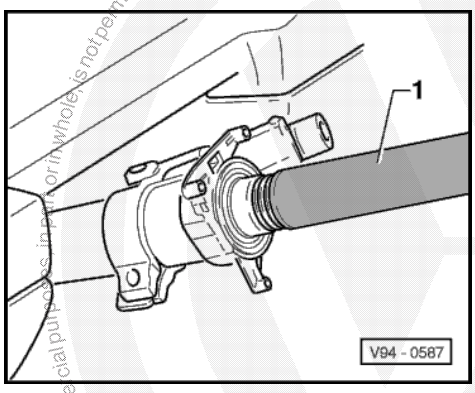

- Remove ignition key and engage steering lock.
- Drive multi - spline adapter sleeve onto steering column with tool VW 420 -1-.
- Connect multi - pin connector to ignition/starter switch.
- Fit reader coil or connect immobilizer control unit connector.
- Tighten shear bolt for steering lock housing until head shears off.

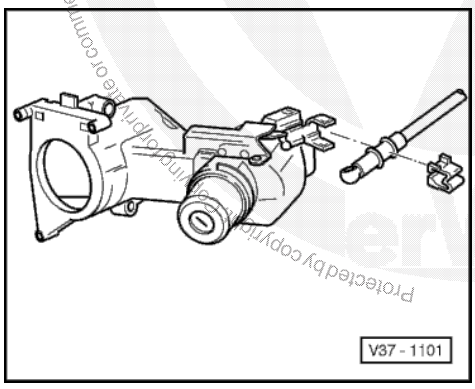

Vehicles with automatic gearbox

- Fit locking cable clip onto locking cable.
- Press locking cable onto ball head.
- Press locking cable with clip into ignition switch support bracket.

Continued for all vehicles:

- Install steering column switch => Page 94-34.
- Install driver's stowage compartment.

Protected by copyright. Copying for private or commercial purposes, in part or in whole, is not permitted unless authorised by Volkswagen AG. Volkswagen AG does not guarantee or accept any liability with respect to the correctness of information in this document. Copyright by Volkswagen AG.

Removing and installing lock cylinder

Removing lock cylinder

- Remove steering lock housing => Page 94-39.

Vehicles with removable immobilizer reader coil:

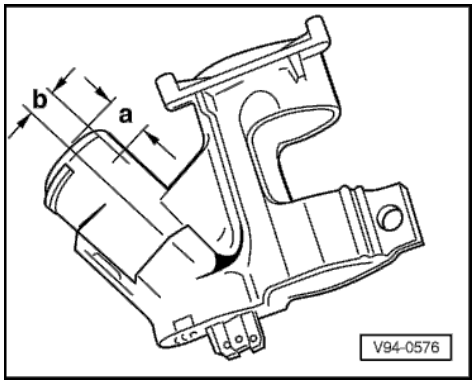

◀ - Mark steering lock housing for drilling

- a -12 mm
- b -10 mm

Vehicles with immobilizer reader coil securely attached to lock cylinder:

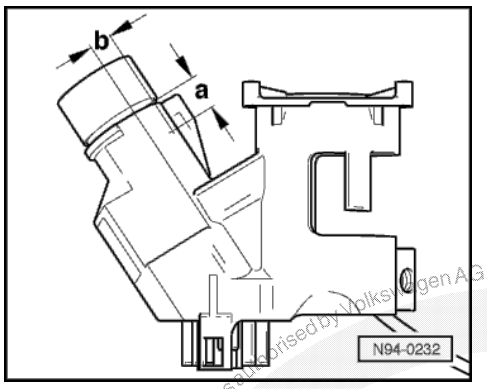

◀ - Mark steering lock housing for drilling

- a -9.5 mm
- b -10 mm

Continued for all vehicles:

- Drill steering lock housing (approx. 3 mm), until the lock cylinder spring is evident.
- Using opposite end of drill compress lock spring and pull out lock cylinder.

Installing lock cylinder

Warning!

Steering lock housing with drilling must not be installed again.

- Push lock cylinder into new steering lock housing.
- By slightly turning key in lock cylinder it can be pushed onto the stop.
- Remove steering lock housing => Page 94-39.

Removing and installing ignition/starter switch

Warning!

Before working on the electrical system disconnect the battery earth strap.

Notes:

- If the vehicle has a security-coded radio, obtain the correct anti-theft code number before disconnecting the battery.
- When the battery is reconnected, check operation of electrical equipment (radio, clock and electric window lifters) according to Workshop Manual or Owner's Manual.

Protected by copyright. Copying for private or commercial purposes, in part or in whole, is not permitted unless authorised by Volkswagen AG. Volkswagen AG does not guarantee or accept any liability with respect to the correctness of information in this document. Copyright by Volkswagen AG.

satelettronica

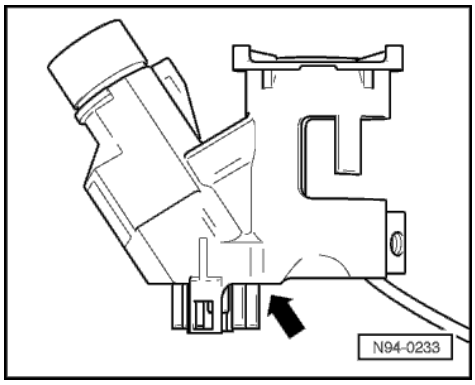

Removing ignition/starter switch:

- Remove steering lock housing => Page 94-39.
- Loosen the securing screw -arrow- and pull ignition/starter switch out from steering lock housing.

Installing ignition/starter switch

- Push ignition/starter switch into steering lock housing.

Note:

When installing the ignition/starter lock switch ensure that the ignition/starter lock switch and the lock cylinder are in the same position, e.g. "ignition on".

- Tighten securing screw.
- Remove steering lock housing => Page 94-39.

Protected by copyright. Copying for private or commercial purposes, in part or in whole, is not permitted unless authorised by Volkswagen AG. Volkswagen AG does not guarantee or accept any liability with respect to the correctness of information in this document. Copyright by Volkswagen AG.

satelettronica

Connector pin assignment on steering column switch

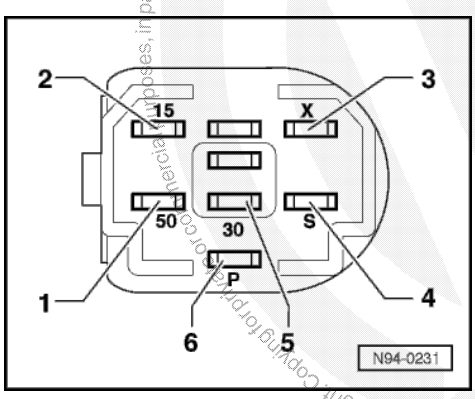

Connector, 8 pin

- 1 -Terminal 50
- 2 -Terminal 15
- 3 -Terminal X
- 4 -Terminal S
- 5 -Terminal 30
- 6 -Terminal P

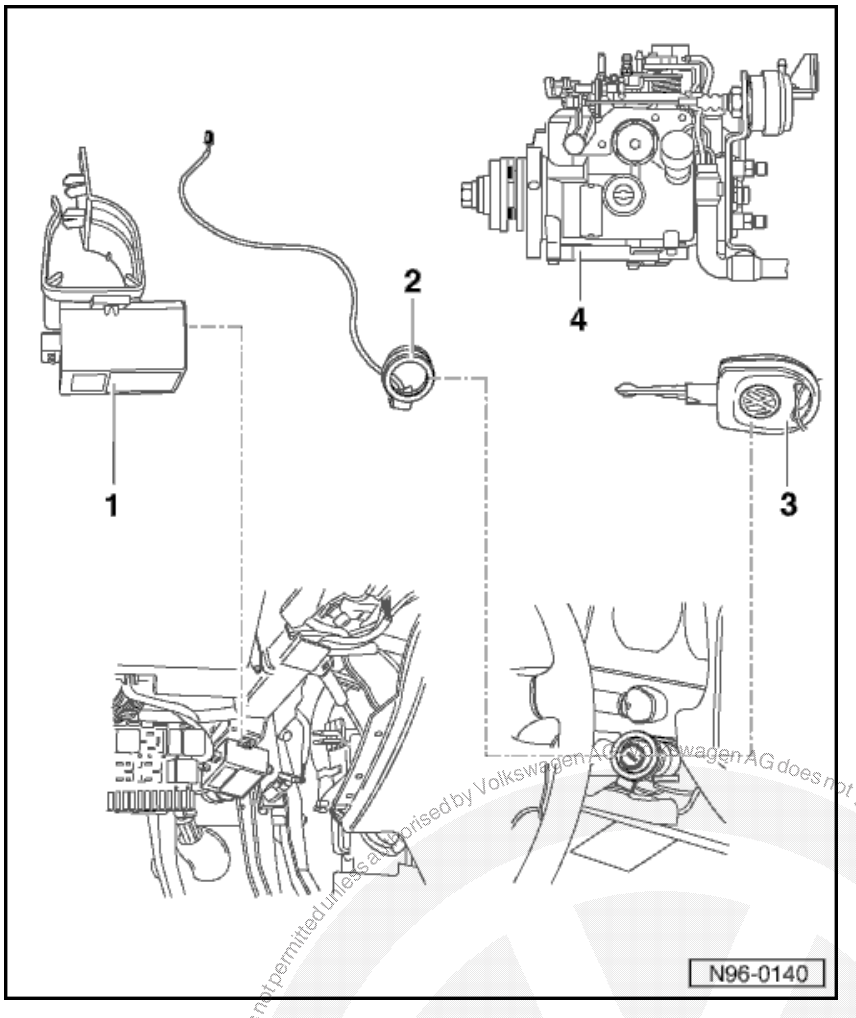

Immobilizer assembly overview

1 - Immobilizer control unit -J362-
- Removing and installing => Page 96-3

2 - Immobilizer reader coil -D2-
- Removing and installing => Page 96-3

3 - Transponder (response - reader memory) integrated in ignition key

4 - Fuel cut-off valve control unit on Diesel injection pump
- If defective the complete Diesel injection pump with the fuel cut-off valve control unit is to be replaced.

Protected by copyright. Copying for private or commercial purposes, in part or in whole, is not permitted unless authorised by Volkswagen AG. Volkswagen AG does not guarantee or accept any liability with respect to the correctness of information in this document. Copyright by Volkswagen AG.

satelettronica

Removing and installing immobilizer control unit

The electronic immobilizer control unit - J362- is located on the steering column under the dash panel.

Removing and installing immobilizer reading coil -D2-

Note:

The immobilizer reading coil is secured to the lock cylinder and cannot be changed individually on newer vehicles.

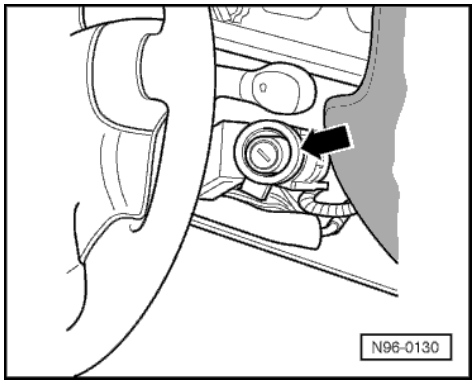

- Remove steering column switch upper and lower trim sections.
- Pull connector off immobilizer control unit.
- Pull reader coil off steering lock housing.

Protected by copyright. Copying for private or commercial purposes, in part or in whole, is not permitted unless authorised by Volkswagen AG. Volkswagen AG does not guarantee or accept any liability with respect to the correctness of information in this document. Copyright by Volkswagen AG.

Transponder

Exchanging transponder (Response reader memory) in ignition coil is not possible.

The complete key must be replaced if the transponder is defective.

=> Repair group 01

satelettronica

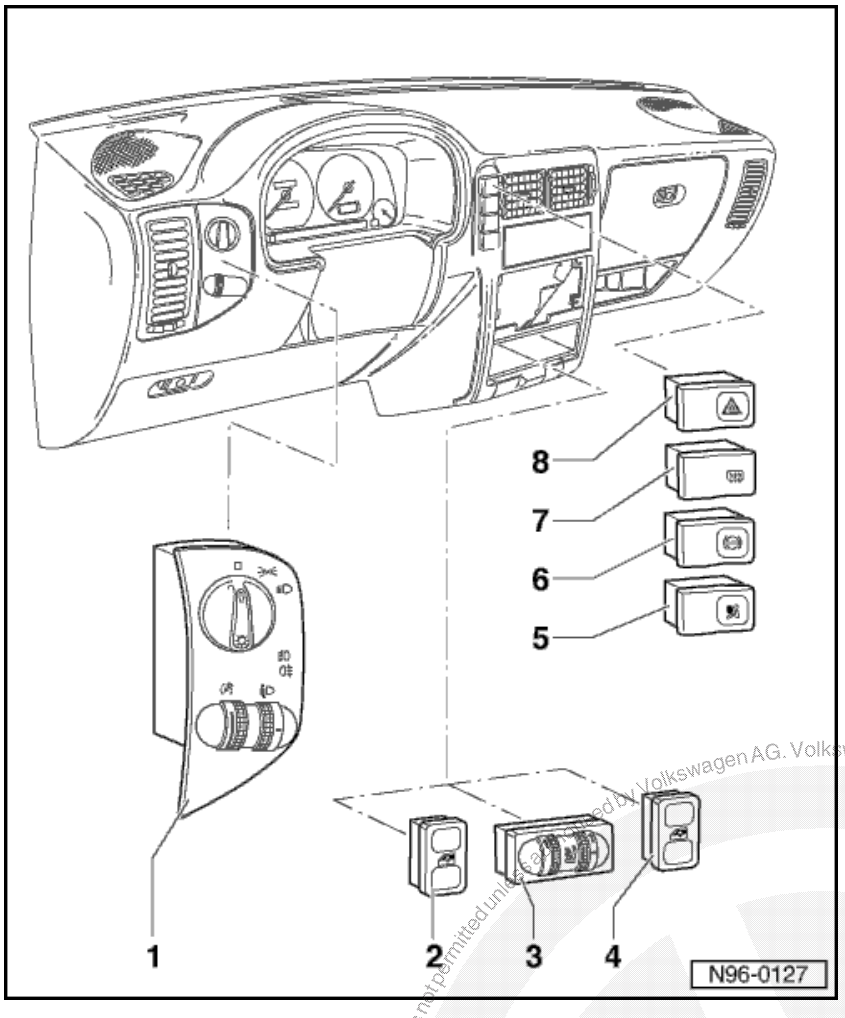

Interior lights and switches

Removing and installing switches in dash panel

1 - Lighting switch -E1-

- Multi - pin switch for side and driving lights, front and rear fog lights for vehicles with electric headlight range control
  - ♦ Removing and installing => Page 96-7

2 - Front left window switch -E40-

- ♦ Removing and installing => Page 96-8

3 - Switch with regulator for heated driver's seat - E94 - and switch with regulator for heated front passenger seat -E95-

- ♦ Removing and installing => Page 96-8

Copyright by Volkswagen AG. Volkswagen AG does not guarantee or accept any liability with respect to the correctness of information in this document. Copyright by Volkswagen AG.

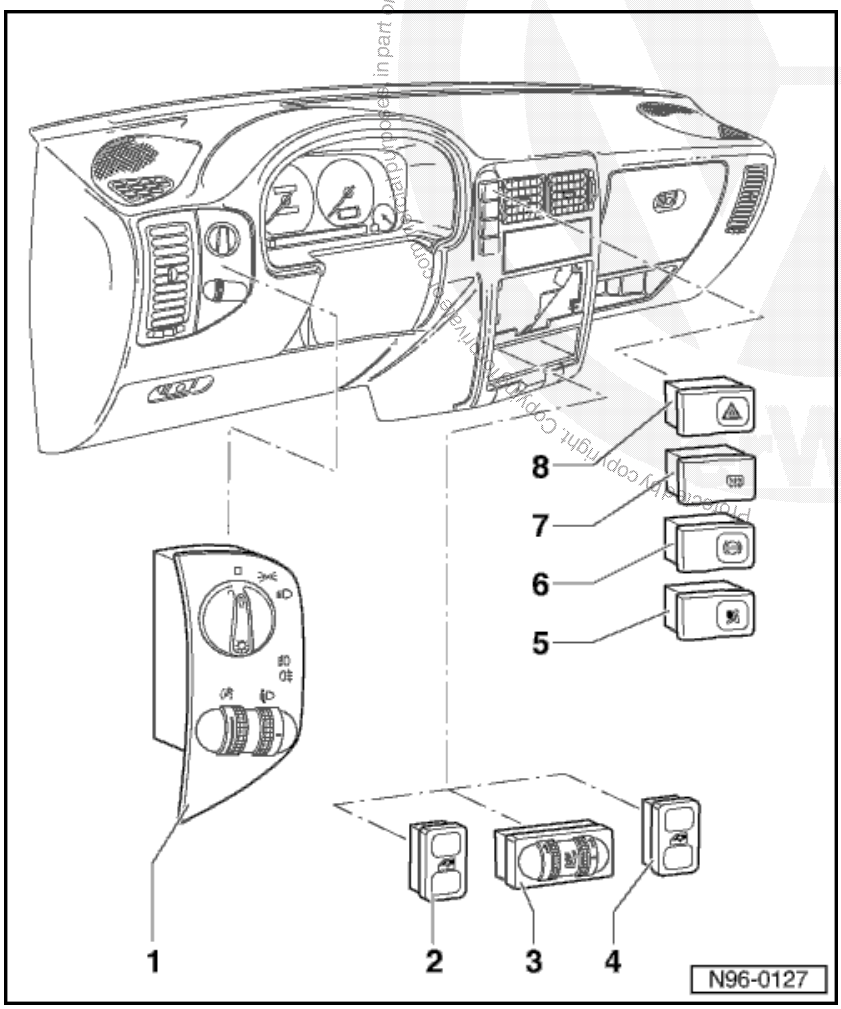

4 - Front right window switch -E41-

- ♦ Removing and installing => Page 96-8

5 - Airbag warning lamp -K75-

- ♦ Removing and installing => Page 96-8

6 - ABS warning lamp -K47-

- ♦ Removing and installing => Page 96-8

7 - Heated rear window switch -E15-

- ♦ Removing and installing => Page 96-8

8 - Hazard warning light switch -E3-

- ♦ Removing and installing => Page 96-8

satelettronica

Removing and installing light switch

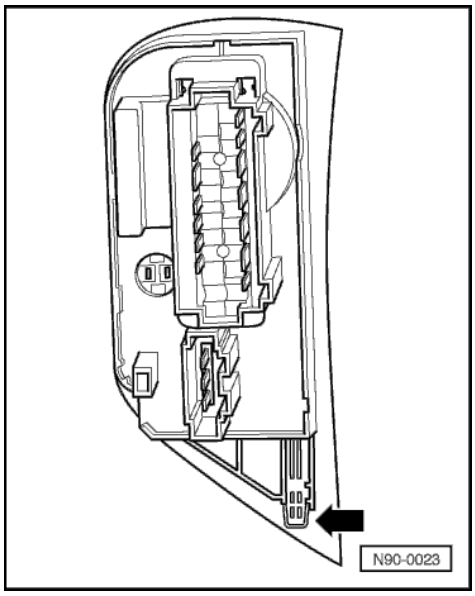

Removing:

- Removing and installing driver's side shelf:

=> General body repairs; Repair group 68

- Press lower retainer -arrow- upwards
- Pull light switch out of dash panel.
- Pull off connector.

Installing:

- Push on connector.
- Insert lighting switch in dash panel and locate correctly.
- Install driver's side shelf

satelettronica

Removing and installing switches in centre dash panel

Removing and installing is the same for all switches and only the heated rear window switch -E5- is described here.

Removing:

♦ Heated rear window switch -E15-

- Insert screwdriver on right side of switch between dash panel and switch and loosen carefully
- Pull off connector

Installing:

- Push on connector
- Push switch into mounting in dash panel and ensure properly located

Copyright by Volkswagen AG. Volkswagen AG does not guarantee or accept any liability with respect to the correctness of information in this document. Copying for private or commercial purposes, in part or in whole, is not permitted unless authorised by Volkswagen AG.

Removing and installing interior light

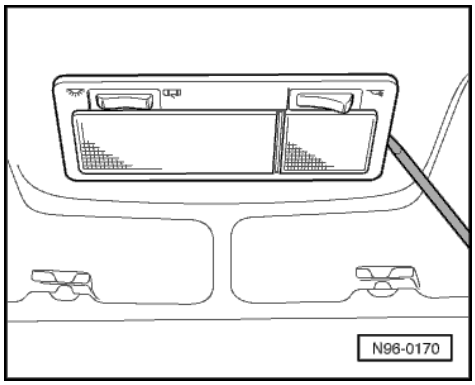

Notes:

- To change the interior light bulb only the lens has to be removed.
- To change the bulb in the passenger reading light the interior light must be removed.

Removing:

- Carefully lever interior light out from the head-lining with a screwdriver.
- Release connector and pull off

Installing:

Install in reverse order.

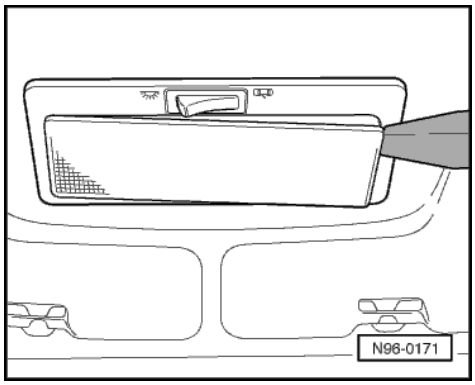

Changing interior light bulb:

- Carefully lever lens off interior light and remove
- Exchange 12V/10 W festoon bulb.
- Insert lens again and engage.

Protected by copyright. Copying for private or commercial purposes, in part or in whole, is not permitted unless authorised by Volkswagen AG. Volkswagen AG does not guarantee or accept any liability with respect to the correctness of information in this document. Copyright by Volkswagen AG.

satelettronica

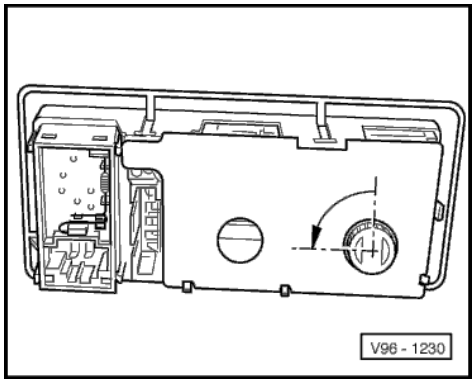

Changing front passenger's reading lamp bulb:

- Release glass based bulb holder by turning to left and remove from interior light
- Pull glass based bulb (12V/5W) out of holder (do not turn) and exchange
- Insert holder with glass based bulb in the interior light and lock by turning to right

Installing:

- Fit connector
- Insert interior light in headlining and engage.

Removing and installing glove box light - W6-

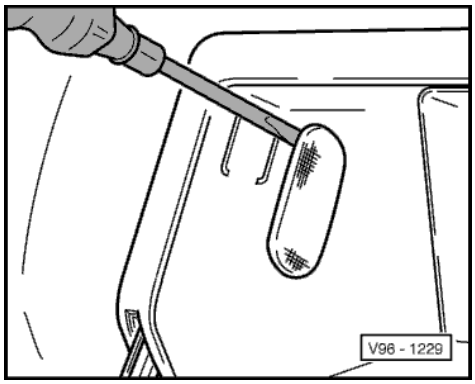

Removing:

- Insert screwdriver at top behind the lens and carefully lever lens out
- Pull out lens with bulb holder and microswitch
- Exchange festoon bulb (12V/3W).

Installing:

- Insert lens with bulb holder and microswitch in stowage compartment and engage.

A functional check of the switch must be carried out after working on the glove box light. With the lid closed the lamp must not light up!

satelettronica

Protected by copyright. Copying for private or commercial purposes, in part or in whole, is not permitted unless authorised by Volkswagen AG. Volkswagen AG does not guarantee or accept any liability with respect to the correctness of information in this document. Copyright by Volkswagen AG.

Removing and installing door contact switch

Removing and installing the

- Front left door contact switch -F2-
- Front right door contact switch -F3-
- Rear left door contact switch -F10-
- Rear right door contact switch -F11-

is the same for all switches and is only described for the front left door contact switch -F2-.

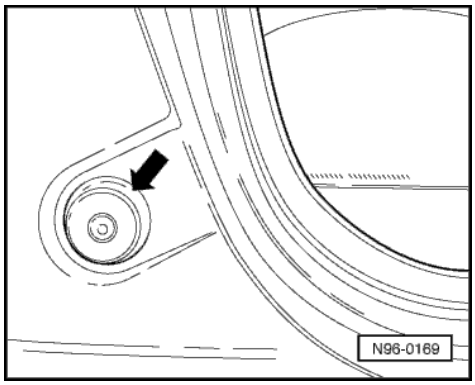

Removing:

- Remove rubber boot -arrow-.
- Carefully lever out door contact switch
- Release connector.

Installing:

Install in reverse order

Removing and installing luggage compartment light switch

Note:

The switch is located in the tailgate lock

- Removing and installing tailgate lock:

=> General body repairs, exterior; Repair group 55; Bonnet, boot lid/tailgate

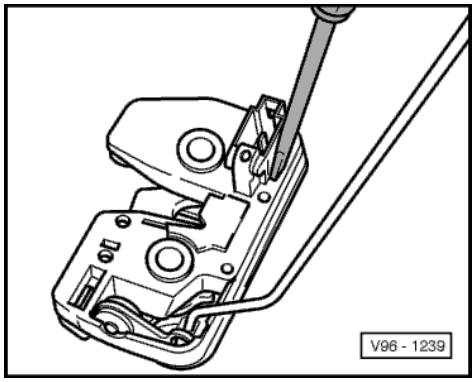

Removing:

- Pull off connector
- Release locating lugs on side with a screwdriver whilst simultaneously pulling switch out of tailgate/boot lid lock

Installing:

- Insert switch in tailgate/boot lid lock until locating lugs engage
- Push on connector.

Removing and installing luggage compartment light -W3-

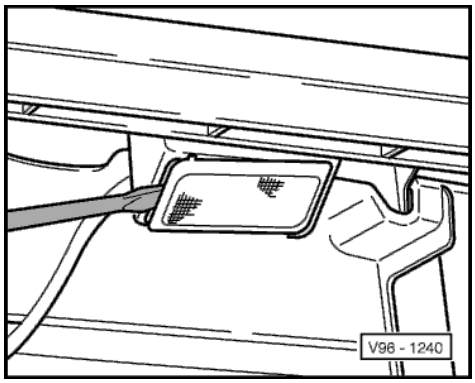

Removing:

- Lever down on light lens until light releases
- Pull off connector
- Exchange festoon bulb (12V/3W)

Installing:

Install in reverse order

Protected by copyright. Copying for private or commercial purposes, in part or in whole, is not permitted unless authorised by Volkswagen AG. Volkswagen AG does not guarantee or accept any liability with respect to the correctness of information in this document. Copyright by Volkswagen AG.
satelettronica

Removing and installing relay plate, coupling station and fuse holder

Warning!

Before working on the electrical system disconnect the battery earth strap.

Notes:

- If the vehicle has a security-coded radio, obtain the correct anti-theft code number before disconnecting the battery.
- When the battery is reconnected, check operation of electrical equipment (radio, clock and electric window lifters) according to Workshop Manual or Owner's Manual.

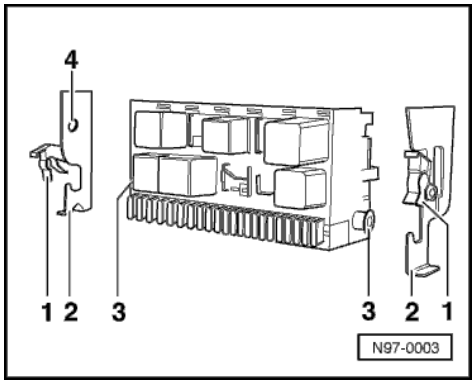

satelettronica

Removing and installing relay plate

- Removing and installing driver's side shelf:

=> General body repairs; Repair group 68

◀ - Release securing clips -1- from pins -3- on left and right of relay plate and swing upwards.

◀ - Push left retainer -2- outwards until the rotary catch on the relay plate has been pulled out of the hole in the retaining plate -4-. Then unhook relay plate.

When installing the relay plate rotating catch must engage in the hole of the retainer -4-. The securing clips -1- must be located on the pins -3-.

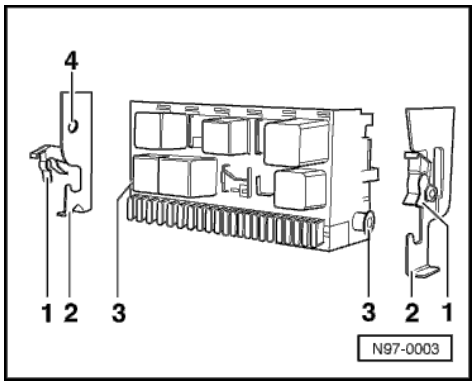

Protected by copyright. Copyright by Volkswagen AG. Copying for private or commercial purposes, in part or in whole, is not permitted unless authorised by Volkswagen AG. Volkswagen AG does not guarantee or accept any liability with respect to the correctness of information in this document.

Removing and installing multi-pin connector behind relay plate

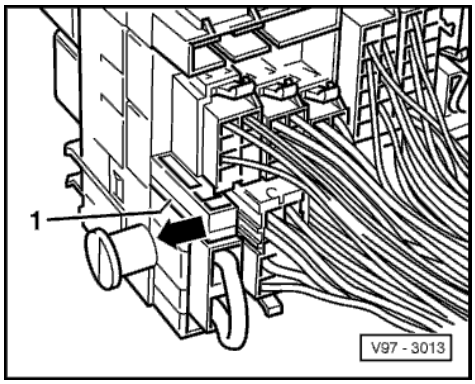

Note:

Multi-pin connector pin assignment

=> Current flow diagrams, Electrical fault finding and Fitting locations.

Removing multi-pin plug

◀ - Pull the retaining slide -1- on rear of relay plate out of the housing -arrow- as far as possible (about 5 mm).

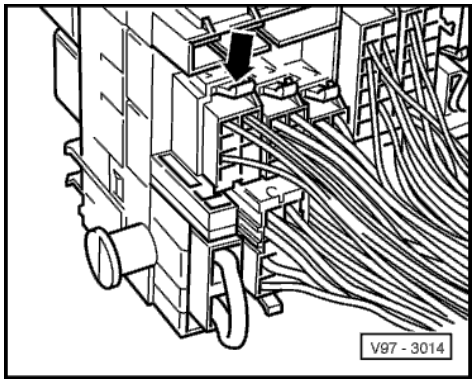

◀ - Press retaining lug on multi-pin connector -arrow- and pull out of relay plate.

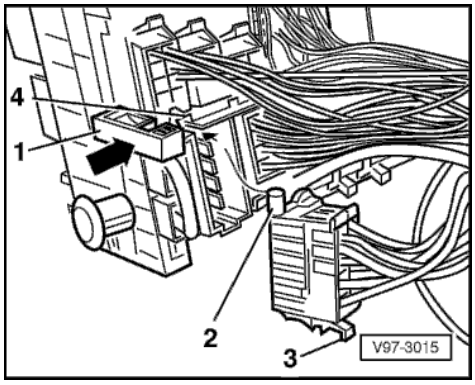

◀ **Installing multi-pin connector**

Note:

Insert connector so that the locking pin -2- face towards locking slide -1-.

- Push multi-pin connector into appropriate location as far as stop with locking pin -2- located in recess -4- until retaining tab -3- engages.
- Push locking slide -1- against stop -arrow-; This is only possible when all multi-pin connectors are pushed in until the retaining tabs -3- are engaged.

Protected by copyright. Copying for private or commercial purposes, in part or in whole, is not permitted unless authorised by Volkswagen AG. Volkswagen AG does not guarantee or accept any liability with respect to the correctness of information in this document. Copyright by Volkswagen AG.

satelettronica

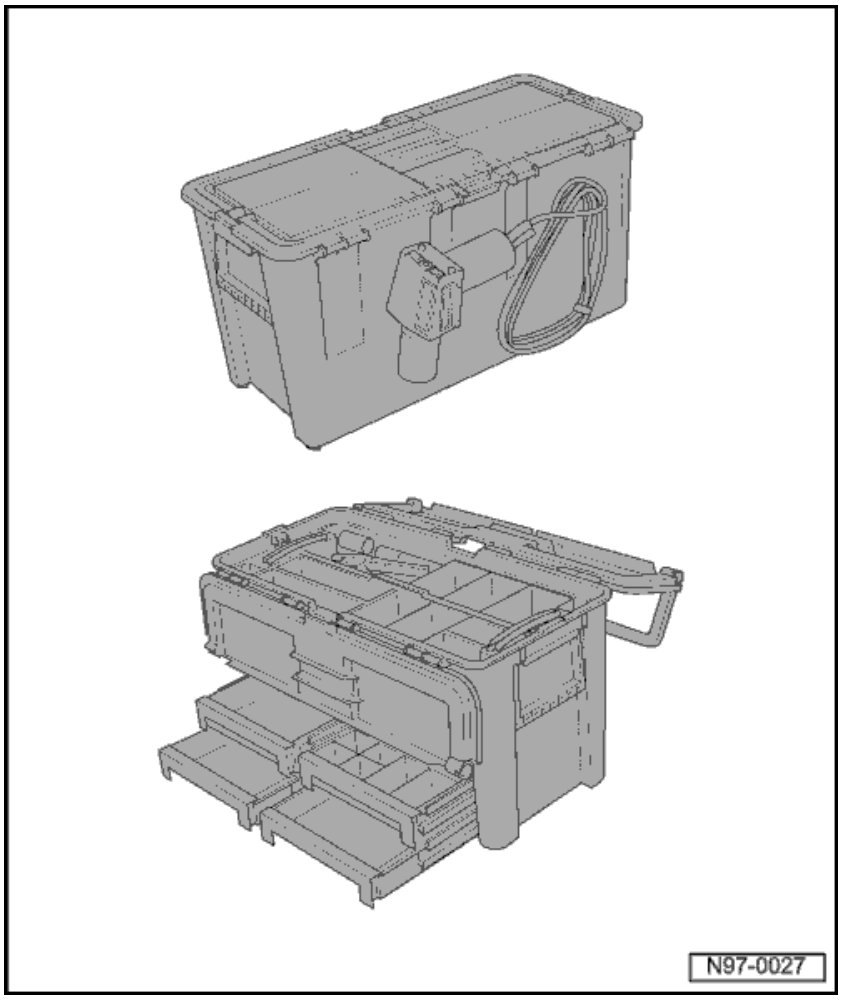

Wiring harness and connector repairs

Wiring harness and connector repairs to the vehicle electrical system must only be undertaken with Repair set VAS 1978!

Wiring harness repair set

VAS 1978

An instruction manual is included in the wiring harness Repair set VAS 1978, in which the procedure for repairs are described in great detail.

Observe the following remarks concerning repairs.

Notes concerning wiring harness and connector repairs

Warning!

Disconnect battery earth strap before starting work on electrical system!

Screened wires may not be repaired. These wires must be replaced complete if damaged.

When repairing airbag wiring harness use only the prescribed contacts, connectors and wires Parts catalogue.

Protected by copyright. Copying for private or commercial purposes, in part or in whole, is not permitted unless authorised by Volkswagen AG. Volkswagen AG does not guarantee or accept any liability with respect to the correctness of information in this document. Copyright by Volkswagen AG.

satelettronica

Warning!

The cause of the damage must be rectified before starting repairs, e.g. sharp edged body parts, defective electrical consumers, corrosion etc.

Wiring repairs may only be undertaken using yellow wiring.

Yellow wiring and locations with yellow insulating tape on wiring harness designate a previous repair!

Warning!

Perform a functional check after each repair and erase fault memories or perform basic settings if necessary.

satelettronica

Protected by copyright. Copying for private or commercial purposes, in part or in whole, is not permitted unless authorised by Volkswagen AG. Volkswagen AG does not guarantee or accept any liability with respect to the correctness of information in this document. Copyright by Volkswagen AG.